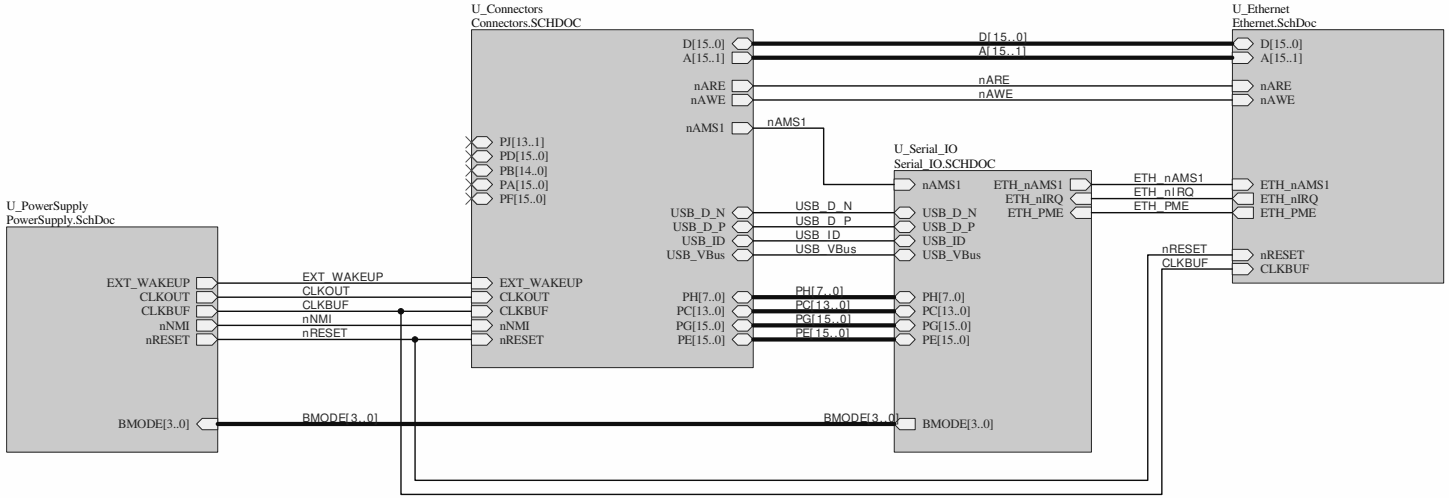

Title DEV-BF548DA-LiteToplevel			Bluetechnix Waidhausenstr. 3/19 A - 1140 Wien AUSTRIA
Size: A3	Number: 1	Revision: V1.2	
Date: 03.07.2008 Time: 09:14:12		Sheet 1 of 5	
File: TopLevel.SchDoc			Drawn By: Daniel Steinmair

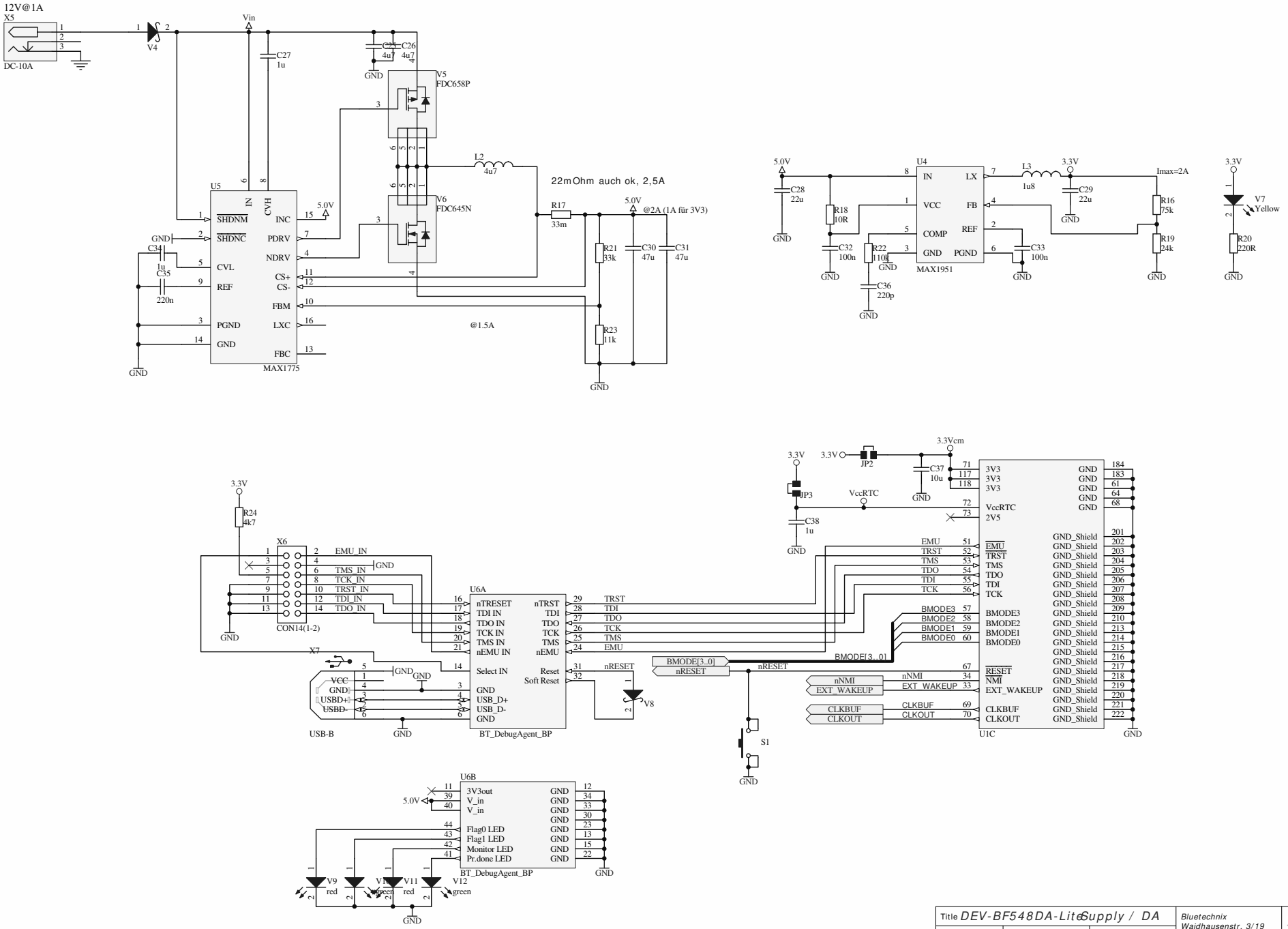

Title DEV-BF548DA-LiteSupply / DA			Bluetechnix Waidhausenstr. 3/19 A - 1140 Wien AUSTRIA
Size: A3	Number: 2	Revision: V1.2	
Date: 03.07.2008 Time: 09:14:13		Sheet 2 of 5	
File: PowerSupply.SchDoc			Drawn By: Stefan Mahlknecht

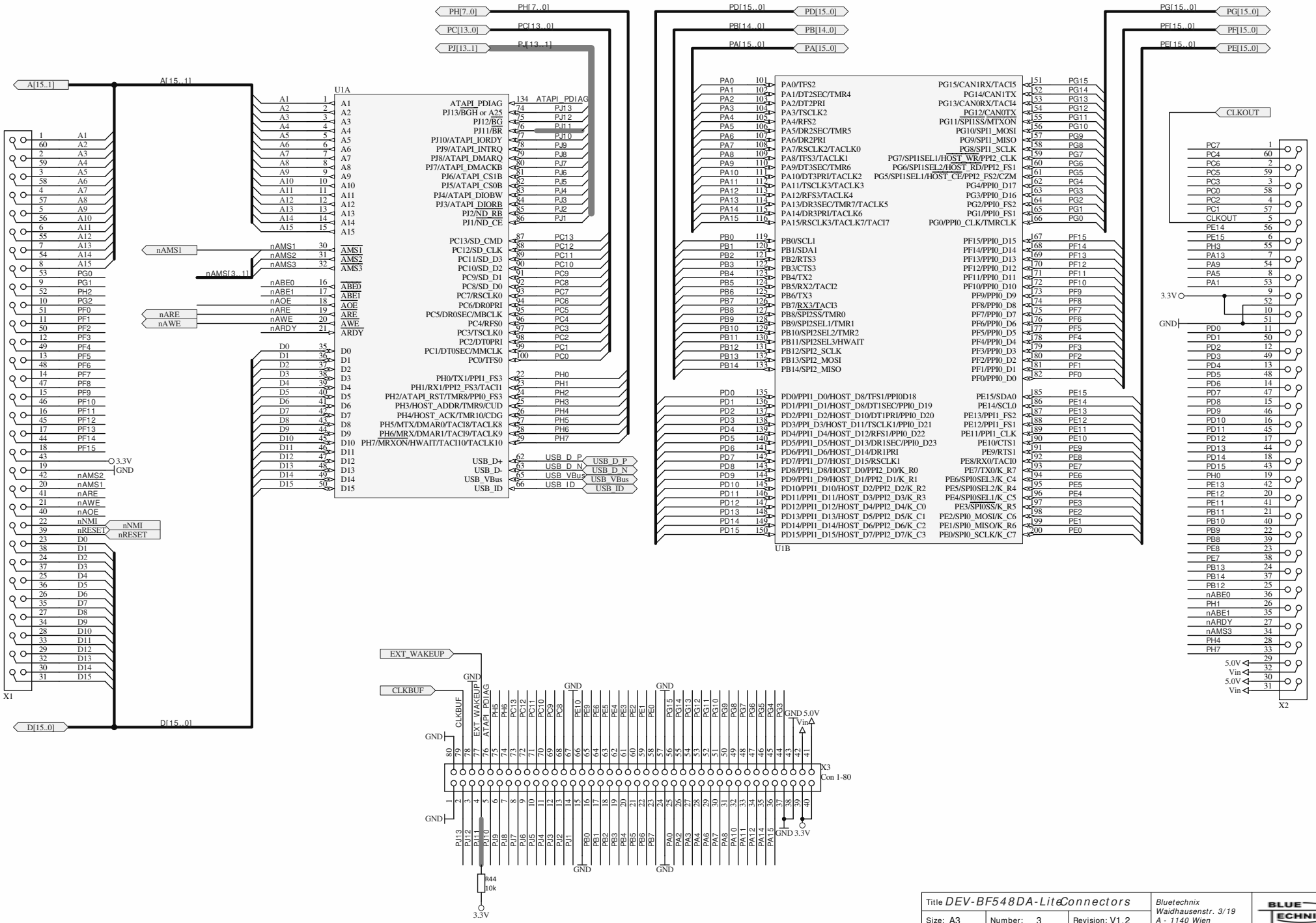

Title DEV-BF548DA-Lite Connectors			Bluetechnix Waidhausenstr. 3/19 A - 1140 Wien AUSTRIA
Size: A3	Number: 3	Revision: V1.2	
Date: 03.07.2008 Time: 09:14:13	Sheet 3 of 5		1/1
File: Connectors.SCHDOC			Drawn By: Daniel Steinmair

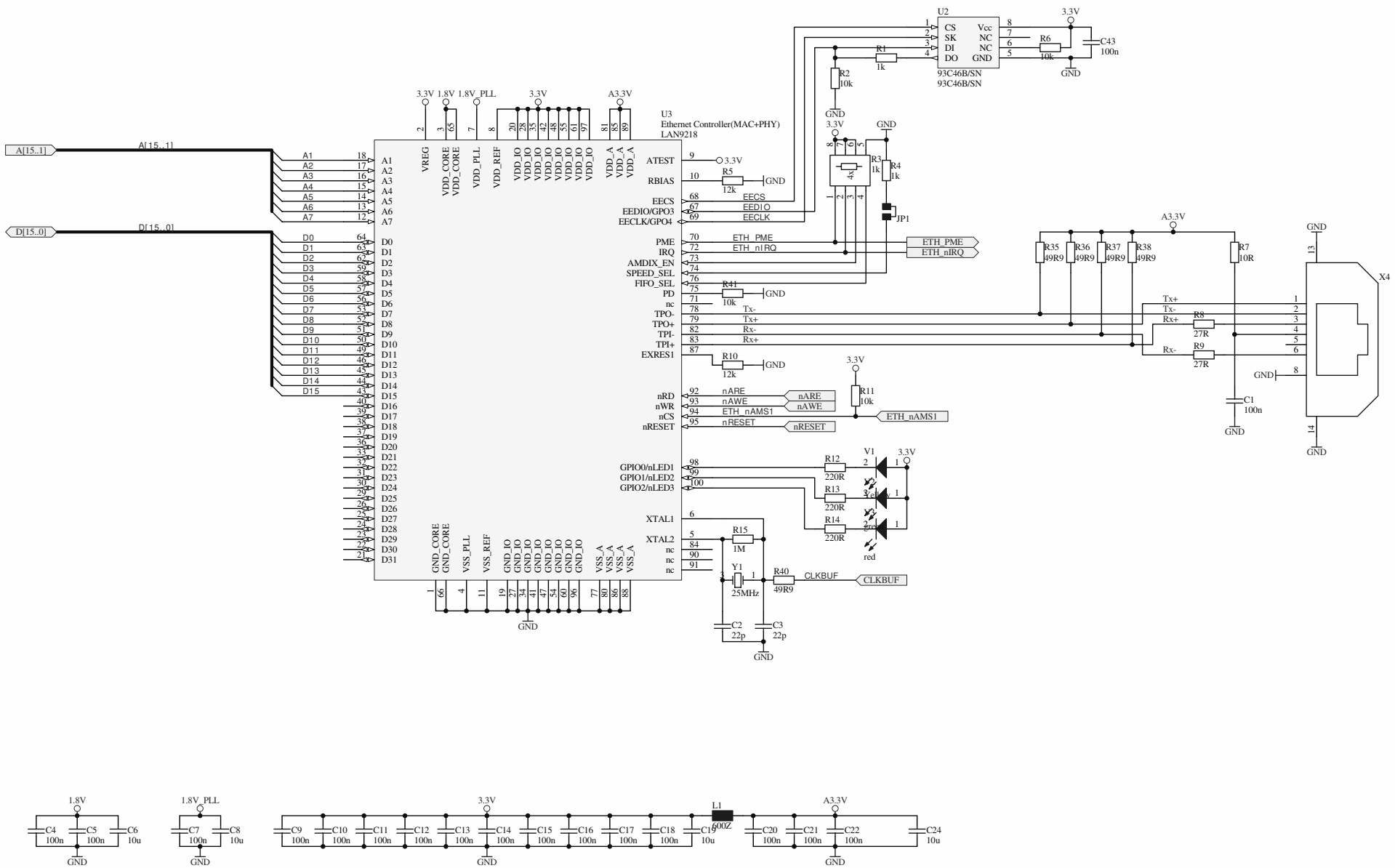

Title DEV-BF548DA-Lite Ethernet			Bluetechnix Waidhausenstr. 3/19 A - 1140 Wien AUSTRIA
Size: A3	Number: 4	Revision: V1.2	
Date: 03.07.2008 Time: 09:14:13		Sheet 4 of 5	
File: Ethernet.SchDoc			Drawn By: Daniel Steinmair

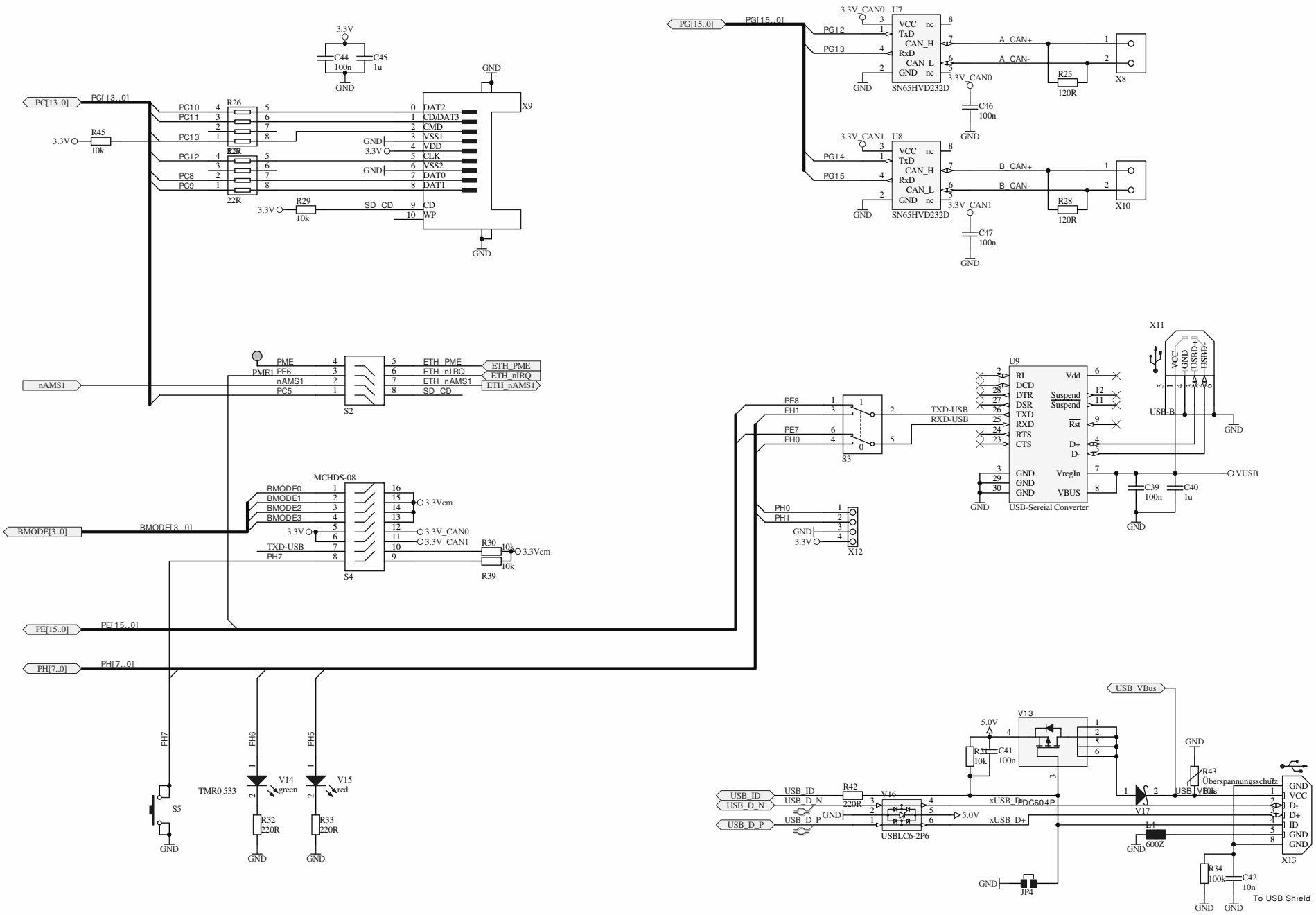

Title DEV-BF548DA-Lite Serial IOs			Bluetechnix Waidhausenstr. 3/19 A - 1140 Wien AUSTRIA
Size: A3	Number: 5	Revision: V1.2	
Date: 03.07.2008 Time: 09:14:13		Sheet 5 of 5	1/1
File: Serial_IO.SCHDOC			Drawn By: Daniel Steinmair