DIALIGHT ASSEMBLY NO.	LED COLOR	OPERATING VOLTAGE
609-2112-120	RED	6 V
609-2212-120	GREEN	6 V
609-2312-120	YELLOW	6 V
609-2112-130	RED	12 V
609-2212-130	GREEN	12 V
609-2312-130	YELLOW	12 V
609-2112-140	RED	24 V
609-2212-140	GREEN	24 V
609-2312-140	YELLOW	24 V

REV.	ECN NO.	REVISIONS	DRN.	CKD.	APP.	DATE
C	——	REVISED ALL LEDs SPECS AND NOTE 1. & NOTE 5. ADDED P/N 609-2112-140, 609-2212-140 AND 609-2312-140. REDRAWN ONTO PRO-E.	DC	YC	A.O.	3-15-00

NOTES:

1. MOUNTING HOLE SIZE: Ø 9.3mm (.366)
2. MAXIMUM PANEL THICKNESS: 7.5mm (.295)
3. MATERIALS:
   - 3.1. METAL HOUSING: BRASS, BRIGHT CHROME PLATED.
   - 3.2. MOUNTING HEX NUT: BRASS, NICKEL PLATED.
   - 3.3 SPLIT LOCK WASHER: STEEL, NICKEL PLATED.
   - 3.4. HEADER/INSULATOR: POLYCARBONATE, COLOR: BLACK.
4. SOLDERABILITY: PER ANSI/IPC-S-805, METHOD A.
5. DIALIGHT PART NO. 609-2X12-1X0 (SEE CHART ABOVE)

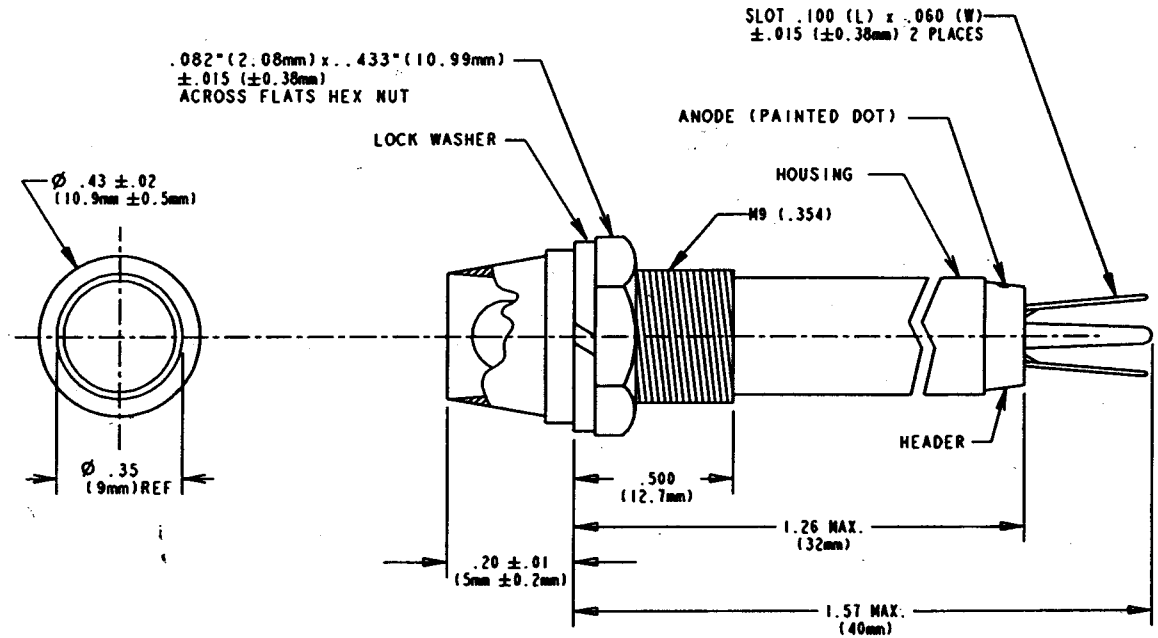

LED CHARACTERISTICS TABLE

COLOR	PEAK WAVE LENGTH λp(nm)	RECOMMENDED OPERATING CURRENT (mA)	ABSOLUTE MAXIMUM RATINGS					ELECTRO-OPTICAL CHARACTERISTICS						
			I_f (mA)	I_m (mA)	V_R (V)	Top (°C)	Tstg (°C)	V_f (V) STD	V_f (V) MAX	V_f (V) I (mA)	I_R (μA) MAX	I_R (μA) V_R(V)	BRIGHTNESS C(mcd) STD	BRIGHTNESS C(mcd) I_f (mA)
RED	635	15	30	50	5	-25 to +85	-25 to +100	2.0	2.8	20	10	4	80	20
GREEN	565	15	30	50	5	-25 to +85	-25 to +100	2.1	2.8	20	10	4	150	20
YELLOW	585	15	30	50	5	-25 to +85	-25 to +100	2.0	2.8	20	10	4	120	20

THIS DRAWING AND THE CONTENTS HEREIN ARE CONFIDENTIAL AND THE SOLE PROPERTY OF DIALIGHT. REPRODUCTION OF THIS DRAWING OR CONSTRUCTION OF ANY PARTS WITHIN THIS DRAWING ARE FORBIDDEN WITHOUT THE WRITTEN CONSENT OF DIALIGHT.

SCALE NONE
ALL DIM'S IN: INCHES
TOLERANCES: UNLESS OTHERWISE SPECIFIED
FRACTIONS: ±1/64
DECIMALS (.XX): ±.020
DECIMALS (.XXX): ±.015
ANGLES: ±3°
FINISH:
FSCM 83330

DRAWING NUMBER C-15589 REV C

TITLE 9mm LED PMI

MATERIAL

Dialight
1913 ATLANTIC AVE.
MANASQUAN, N.J. 08736

SHEET OF FAMILY TABLE: