LOADING PATTERN MATING SIDE

	01				05					10	
f	0	0	0	0	0	0	0	0	0	0	0
e	4	4	4	4	4	4	4	4	4	4	4
d	4	4	4	4	4	4	4	4	4	4	4
c	4	4	4	4	4	4	4	4	4	4	4
b	4	4	4	4	4	4	4	4	4	4	4
a	4	4	4	4	4	4	4	4	4	4	4
z	0	0	0	0	0	0	0	0	0	0	0

POS

LOADED CONNECTOR ASSEMBLY
(FOR EXAMPLE)

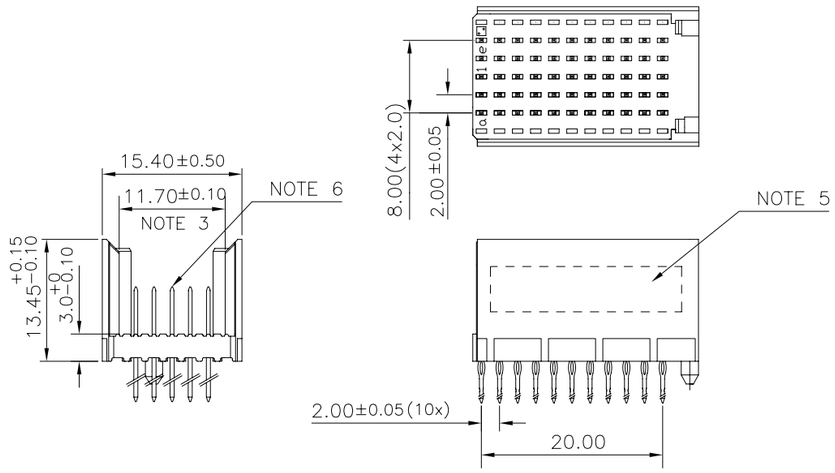

CONTACT OVERVIEW

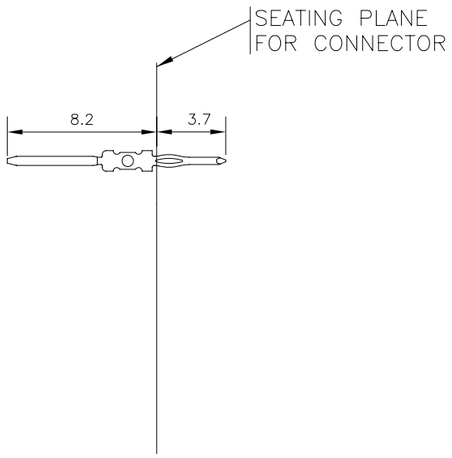

HM2P09PA5110----

LEAD FREE INDICATOR : LF = LEAD FREE
(DIGIT 15 & 16)

PLATING CODE (DIGIT 13 AND 14)

PLATING TABLE

CODE	PLATING	CONTACT AREA	TYPE OF TERMINAL	PERFORMANCE LEVEL
AA	0.75µ Au	GOLD OVER NICKEL PLATING.	SHORT TERMINAL EON PRESSFIT CONTACTS	IEC PERFORMANCE LEVEL 2 (250 mating cycles) or TELCORDIA CO
AB	1.25µ Au	GOLD OVER NICKEL PLATING.	SHORT TERMINAL EON PRESSFIT CONTACTS	TELCORDIA UE

LAY-OUT P.C.B.-HOLE

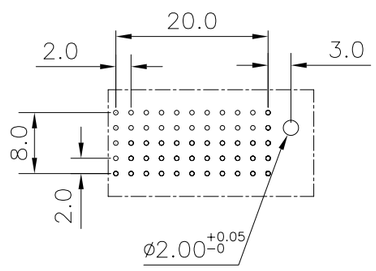

NOTES

1. THIS PRODUCT IS CSA APPROVED.
2. THIS PRODUCT IS UL RECOGNIZED.
3. MEASURED AT THE BOTTOM.
4. MATERIAL CONTACT: PHOSPHOR BRONZE
   HOUSING : CREAM WHITE GLASS FILLED POLYESTER UL-94V0
5. CONNECTOR PRINTED WITH P/N AND DATE CODE.
6. FOR ACTUAL CONTACT LOADINGS, SEE LOADING PATTERN MATING SIDE.
7. SHAPE OF CONNECTOR HOUSING CAN ALTER DEPENDING ON PRODUCTION LOCATION
8. THE PRODUCT (LF) MEETS EUROPEAN UNION DIRECTIVES AND OTHER COUNTRY REGULATIONS AS DESCRIBED IN GS-22-008
9. FOR RECOMMENDED PTH DIMENSIONS REFER DRAWING : BS, A , 201572 , 001

CATALOG NO: HM2P09PA5110----

ltr	ecn no	dr	date
A	108-0097	MINI	2008-09-10
B	109-0210	MINI	2009-10-06
C	109-0290	AB	2009-12-29
D	110-0018	MINI	2010-01-13

dr	MINI K VANDANATH	2008-09-10
engr	ALEX BABU	2008-09-10
chr	ALEX BABU	2008-09-10
appd	ALEX BABU	2008-09-10

mat'l. code: SEE NOTE 4
surface: ISO 1302
tolerance: ISO 406 ISO 1101
tolerances unless otherwise specified: angles 0°±1°; linear .0±0.2, .00±0.1
projection
MM
scale –
product family: MILLIPACS
title: MILLIPACS 5+2R STR HDR PF CONN TYPE C
dwg no: BS, C , 203032, 005
sheet 1 of 1
size: A3
type: Product Customer Drawing

sheet index	revision	D
	sheet	1

FCIconnect.com
Copyright FCI