ITEM NO.	PART NUMBER	DESCRIPTION	QTY.	COMPONENT NOTES
1	51-00025.M	Connector, PPL7, 7C, 0° plug, 7x38 mm, chrome, solder, Ø2.2-5.2 mm wire, molding style	1	
2	30-00672	Wire, 6C BC, 28 AWG, UL20280, 300V, 80C, 4.7 mm, braided shield, FT2, TPU	1	
3	24-00206	Overmold, PPL7 strian relief, 10x24 mm	1	TPU
4	Heat shrink	black	1	covers jacket end
5	Heat shrink	black	1	covers drain

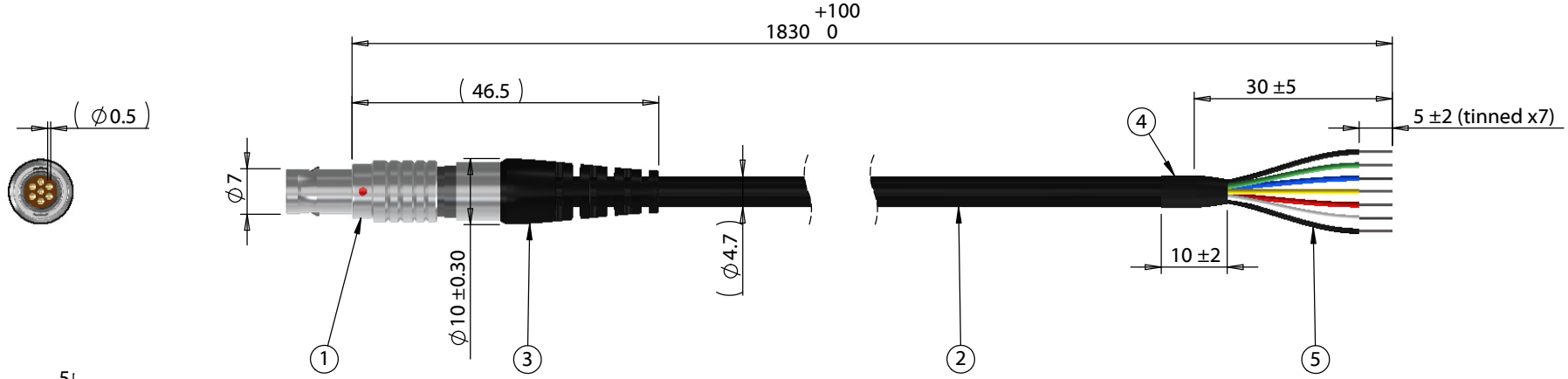

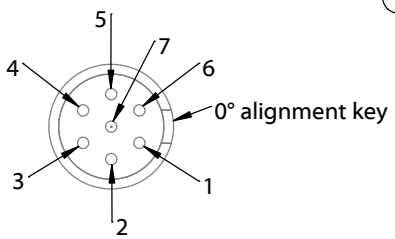

Front View
(Not to Scale)

Wiring Diagram 50-00025.M	wire color
1	Red
2	White
3	Black
4	Yellow
5	Blue
6	Green
7	Drain/ Shield

Revision:	Date:	Description:
A	3/27/2018	Initial release

Prepared: AG Digitally signed by AG Date: 2018.04.19 14:59:21 -07'00'

Verified: AW Digitally signed by AW Date: 2018.04.19 16:14:36 -07'00'

Dimensions are in millimeters.
Tolerances:
X: ± 0.5 mm
X.X: ± 0.3 mm
X.XX: ± 0.05 mm

Notes:

RoHS compliant

Function test: no open, no short circuit, no intermittent

Description:

Cable, 1830 mm, 7C 7mm push-pull plug 51-00025.M, to stripped tinned, 28 AWG, UL20280 30-00672

TENSILITY
tel 1.541.323.3228 800 877.670.7118
fax 1.541.323.4202 web tensility.com

Size: A
Part number: 10-02266
Scale: 1:1
Sheet 1 of 1

To see a custom version of this cable assembly, call Tensility at 541-323-3228 or email engineering@tensility.com

5 4 3 2 1