THIS COPY IS PROVIDED ON A RESTRICTED BASIS AND IS NOT TO BE USED IN ANY WAY DETRIMENTAL TO THE INTERESTS OF PANDUIT CORP.

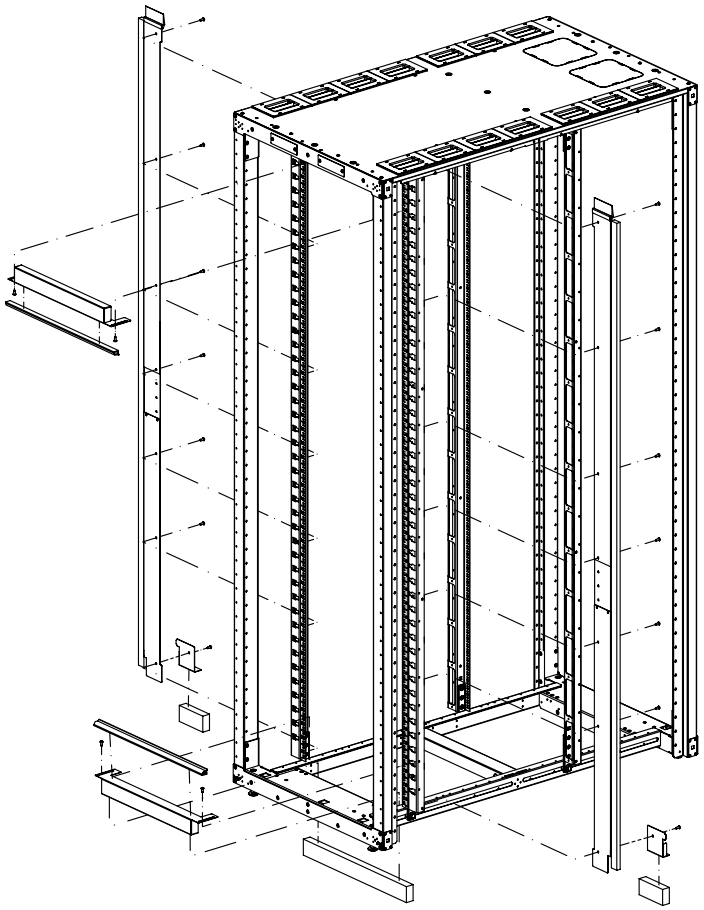

APPLICATION VIEW
CABINET NOT INCLUDED

PANDUIT PART NO.	WEIGHT
S7VBPN	18.0 LBS/EACH 8.1 Kg/EACH

1. VISIT OUR ON-LINE CATALOG AT WWW.PANDUIT.COM FOR A LIST OF CURRENT PARTS APPLICABLE FOR USE WITH THIS PRODUCT.
2. DIMENSIONS IN PARENTHESES ARE METRIC [mm].
3. VERTICAL BLANKING PANELS BLOCK BYPASS AIR AND DIRECT COLD AIRFLOW THROUGH EQUIPMENT.
4. PARTS SUPPLIED:
   - 1- 42-48RU RIGHT VERTICAL BLANKING PANEL
   - 1- 42-48RU LEFT VERTICAL BLANKING PANEL
   - 2- HORIZONTAL BLANKING PANEL
   - 1- HARDWARE AND SEAL KIT
   - 1- INSTRUCTION SHEET
5. FULLY BONDED STRUCTURE WHEN ASSEMBLED PER INSTRUCTIONS.

REV	DATE	BY	CHK	APR	DESCRIPTION	ECN
01A	11-22-13	PBS	ROJC	JDWE	RELEASED TO PRODUCTION	13V379TU-DC

TITLE: S7VBPN

CUSTOMER DRAWING

ITEM REVISION NAME: 13V379TU/01.PRT

DATASET FILE NAME: 13V379TU_DC/01A.PRT

UNLESS OTHERWISE SPECIFIED, DIMENSIONAL TOLERANCES ARE:

INCHES		METRIC - MILLIMETER		ANGLE
X.X	+/- 0.03	X.	+/- 0.8	+/- 1°
X.XX	+/- 0.018	X.X	+/- 0.46	
X.XXX	+/- 0.007	X.XX	+/- 0.18	

THIRD ANGLE PROJECTION

MATERIAL/COLOR: N/A

DRAWING NUMBER: 13V379TU-DC

DRAWN BY	DATE	CHK	SCALE	SHT 1 OF 2	SIZE
PBS	11-22-13	ROJC	NONE		A

THIS COPY IS PROVIDED ON A RESTRICTED BASIS AND IS NOT TO BE USED IN ANY WAY DETRIMENTAL TO THE INTERESTS OF PANDUIT CORP.

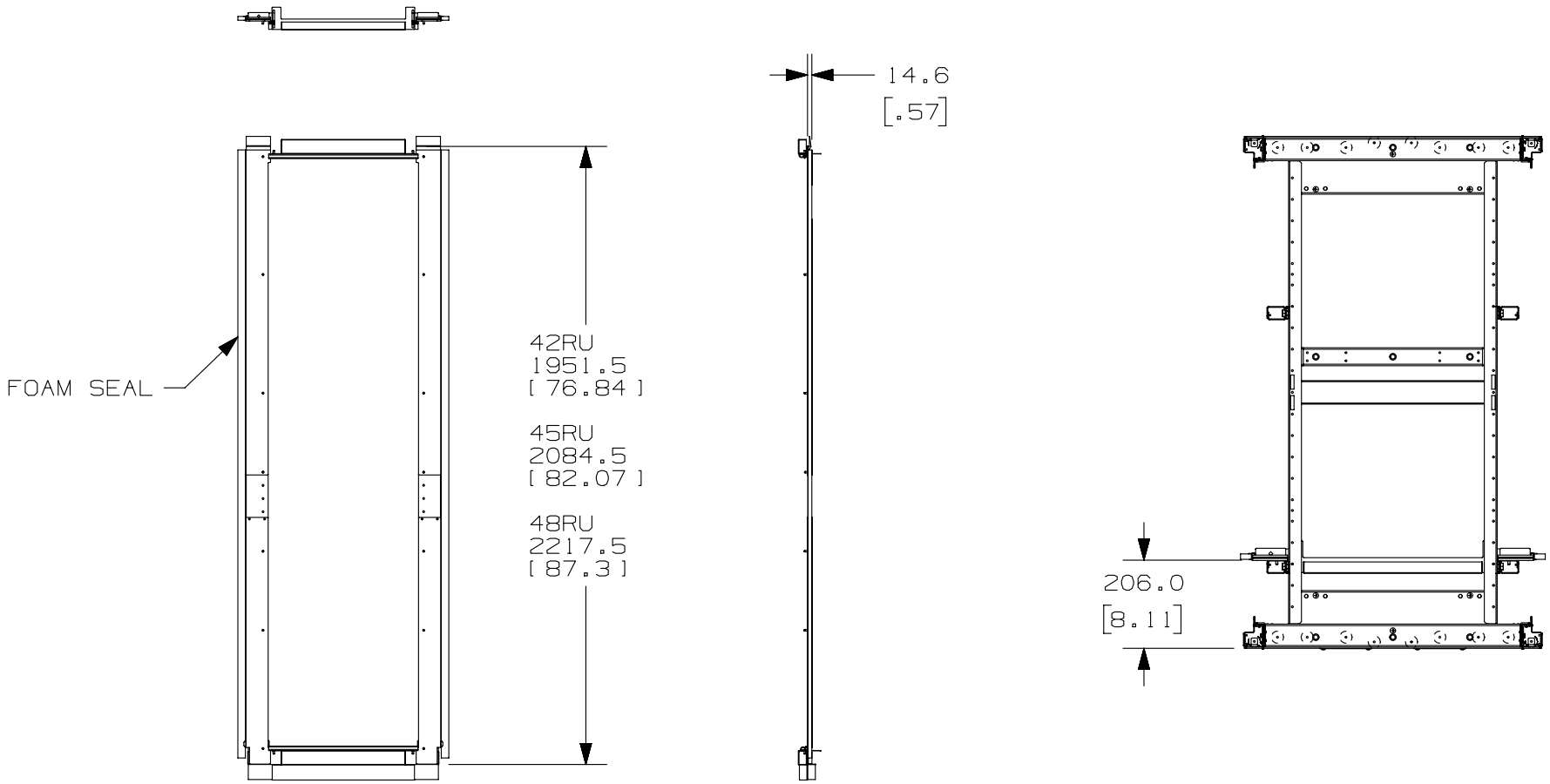

REV	DATE	BY	CHK	APR	DESCRIPTION	ECN
01A	11-22-13	PBS	ROJC	JDWE	SEE SHEET 1 OF 2 FOR REVISIONS	13V379TU-DC

TITLE

S7VBPN

CUSTOMER DRAWING

ITEM REVISION NAME: 13V379TU/01.PRT

DATASET FILE NAME: 13V379TU_DC/01A.PRT

UNLESS OTHERWISE SPECIFIED, DIMENSIONAL TOLERANCES ARE:

INCHES		METRIC - MILLIMETER		ANGLE
X.X	+/- 0.03	X.	+/- 0.8	+/- 1°
X.XX	+/- 0.018	X.X	+/- 0.46	
X.XXX	+/- 0.007	X.XX	+/- 0.18	

THIRD ANGLE PROJECTION

MATERIAL/COLOR: N/A

DRAWING NUMBER: 13V379TU-DC

DRAWN BY	DATE	CHK	SCALE		SIZE
PBS	11-22-13	ROJC	NONE	SHT 2 OF 2	A