THIS DRAWING IS UNPUBLISHED. RELEASED FOR PUBLICATION ,19 .
© COPYRIGHT 19 BY AMP INCORPORATED. ALL RIGHTS RESERVED.

LOC	DIST
AA	22

REVISIONS

P	LTR	DESCRIPTION	DATE	DWN	APVD
	S	REVISED; EC 0UFO-0129-01	24SEP01	DLD	LLV

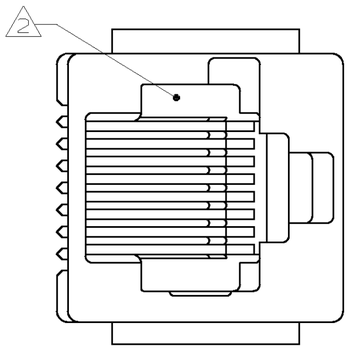

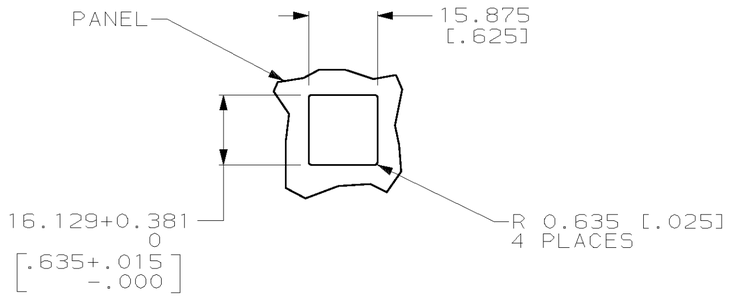

PANEL CUTOUT
SCALE 1:1

1. MATERIAL: HOUSING - PBT POLYESTER, BLACK. TERMINAL - 0.35 [.0138] THICK PHOS BRONZE PLATED WITH 1.27µm [.000050] THICK HARD GOLD IN LOCALIZED GOLD PLATE AREA AND 2.03µm [.000080] THICK TIN-LEAD IN SOLDER AREA OVER 1.27µm [.000050] THICK NICKEL UNDERPLATE.

2. CAVITY CONFORMS TO FCC RULES AND REGULATIONS PART 68 AND REA BULLETIN 345-81, PE-76 SPECIFICATION FOR MODULAR TELEPHONE HARDWARE.

3. ALL DIMENSIONS SHOWN ARE MAXIMUM UNLESS OTHERWISE SPECIFIED.

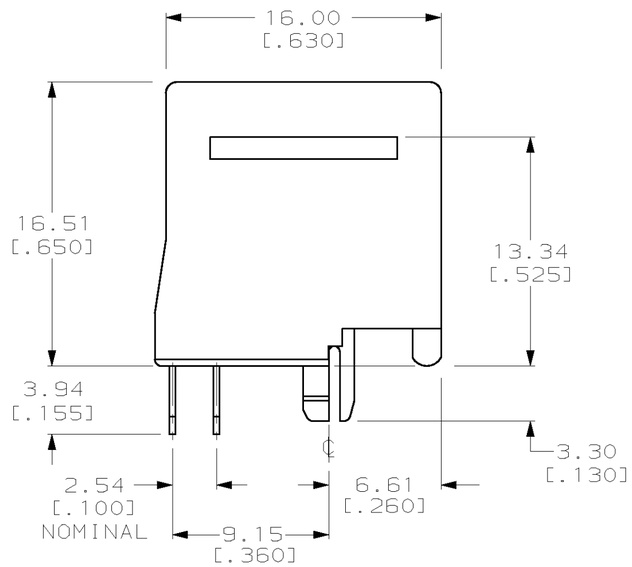

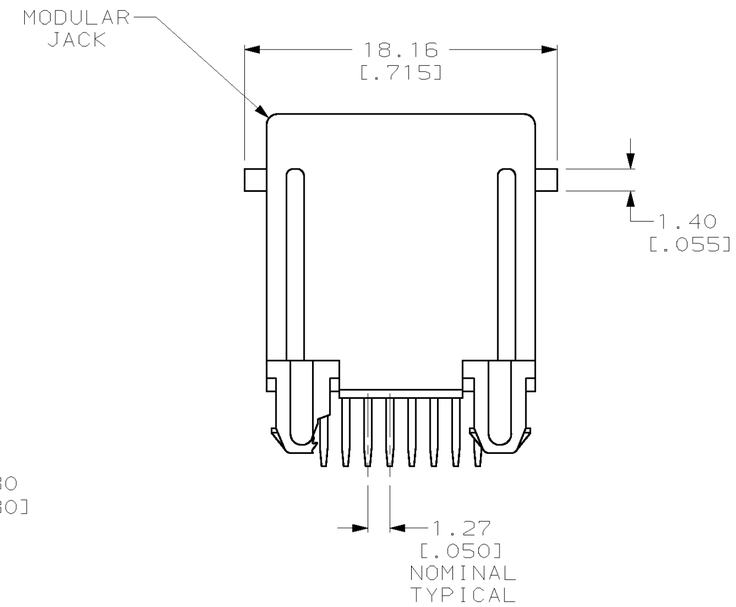

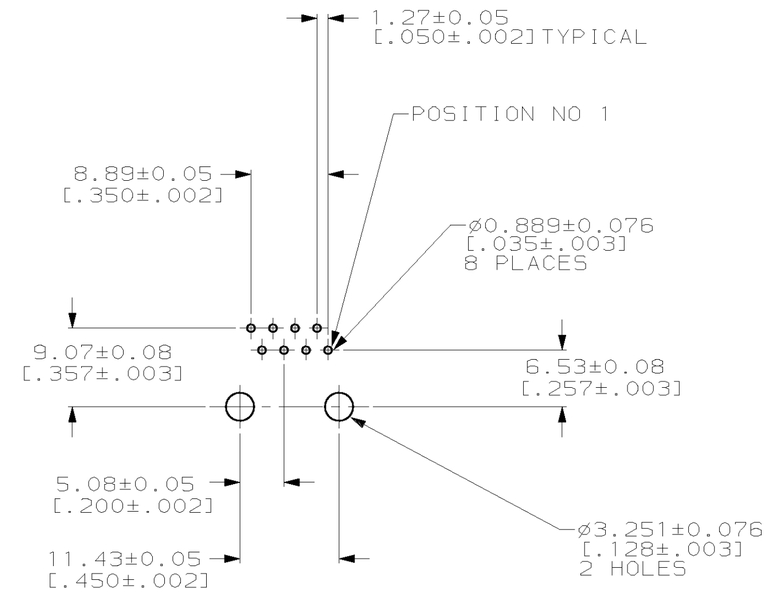

PRINTED CIRCUIT BOARD LAYOUT
NON-COMPONENT SIDE SHOWN
SCALE 2:1

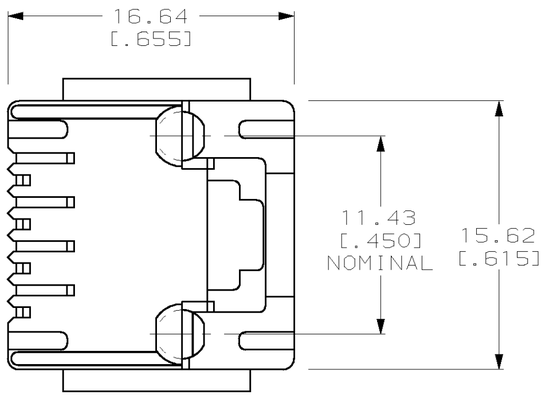

520260

8	520260-4
CONTACTS	PART NUMBER

THIS DRAWING IS A CONTROLLED DOCUMENT.

DIMENSIONS: mm [INCHES]

TOLERANCES UNLESS OTHERWISE SPECIFIED:
0 PLC ±-
1 PLC ±-
2 PLC ±-
3 PLC ±-
4 PLC ±-
ANGLES ±-

MATERIAL 1
FINISH 1

DWN L. MUSTAR/UTA 12JUN95
CHK N. JONES 15JUN95
APVD E. LAURER 22JUN95
PRODUCT SPEC 108-1163
APPLICATION SPEC 114-2048
WEIGHT –

AMP Incorporated
Harrisburg, PA 17105-3608

NAME PRINTED CIRCUIT BOARD MODULAR JACK ASSEMBLY, TOP ENTRY, 8 POSITION, KEYED, FLANGELESS, WITH PANEL STOPS

SIZE	CAGE CODE	DRAWING NO	RESTRICTED TO
A2	00779	C-520260	–

CUSTOMER DRAWING | SCALE 4:1 | SHEET 1 OF 1 | REV S