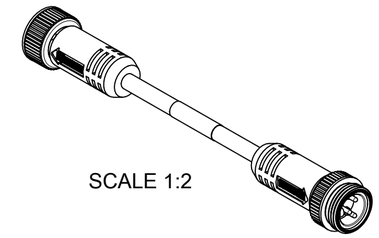

SCALE 1:2

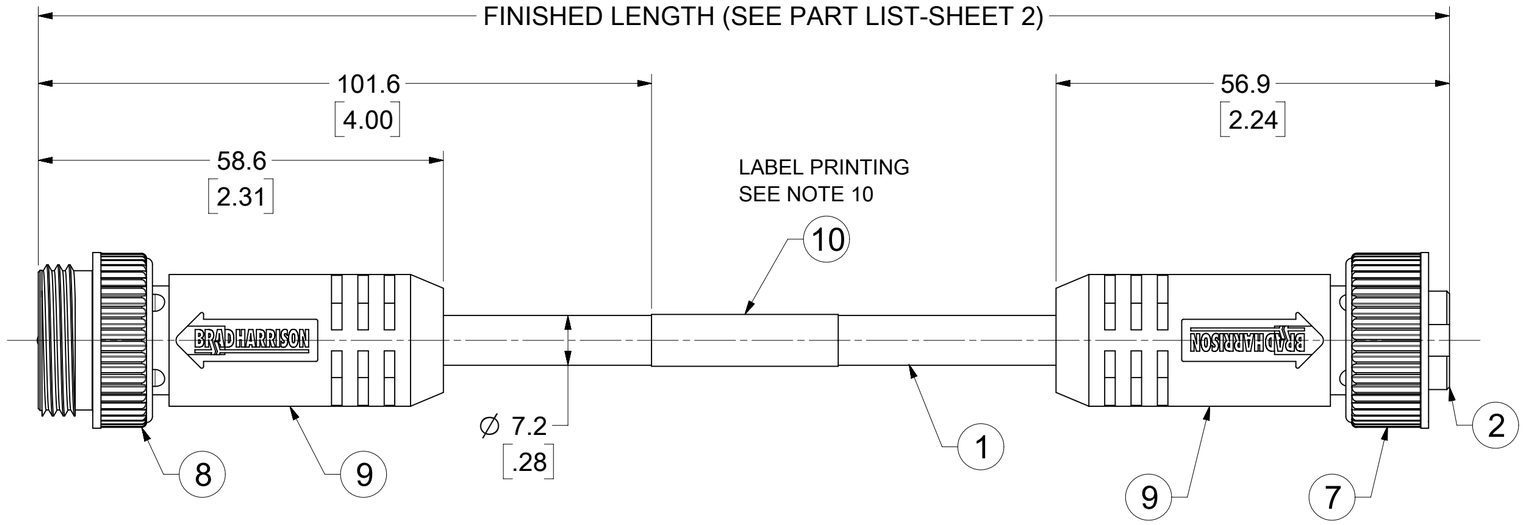

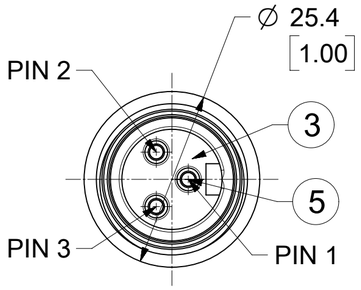

MALE FACE VIEW

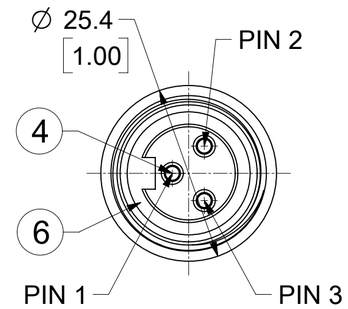

FEMALE FACE VIEW

NOTES:

1. MATERIAL: AS NOTED
2. FINISH: AS NOTED
3. ELECTRICAL:
   VOLTAGE RATING: 600 V
   CURRENT RATING: 10 A
4. TEMPERATURE RATING:
   STATIC: -40 °C TO 90 °C
   DYNAMIC: -25 °C TO 80 °C
5. PROTECTION: IP67 (WHEN MATED)
6. UL CERTIFICATION: UL LISTED, FILE NO. E152210
7. COUPLING THREAD: 7/8"-16UN
8. ALL DIMS ARE FOR REFERENCE UNLESS TOLERANCED OR NOTED OTHERWISE
9. FOR PART NUMBER MATRIX, PART LIST AND CABLE TOLERANCE REFER SHEET 2
10. LABEL PRINTING ACC. STANDARD LABEL INSTRUCTION

LABEL PRINTING

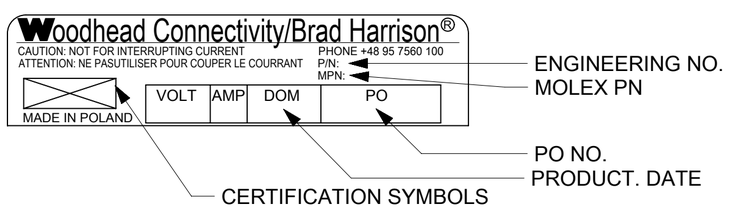

WIRING DIAGRAM

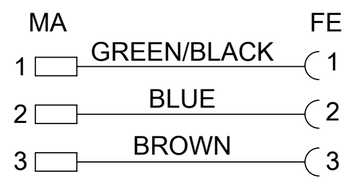

BILL OF MATERIAL

10	WRAP LABEL	VINYL	BLACK/YELLOW
9	OVERMOLD	TPE	YELLOW
8	MALE COUPLING NUT	ZINC DIE CAST	BLACK E-COAT
7	FEMALE COUPLING NUT	ZINC DIE CAST	BLACK E-COAT
6	FRICTION RING	NYLON	WHITE
5	PIN CONTACT	Cu ALLOY	GOLD OVER NICKEL
4	SOCKET CONTACT	Cu ALLOY	GOLD OVER NICKEL
3	MALE INSERT	TPE	YELLOW
2	FEMALE INSERT	TPE	YELLOW
1	#16-3 CABLE, WELD AND SLAG RESISTANT	TPU	GREY
ITEM	DESCRIPTION	MATERIAL	FINISH/COLOR

DOCUMENT STATUS	P1	RELEASE DATE	2023/04/27 12:11:49

THIS DRAWING CONTAINS INFORMATION THAT IS PROPRIETARY TO MOLEX ELECTRONIC TECHNOLOGIES, LLC AND SHOULD NOT BE USED WITHOUT WRITTEN PERMISSION

FUNCTIONAL SYMBOLS: FA = 0, FC = 0, FP = 0
DIVISIONAL SYMBOLS

DIMENSION UNITS: MM/INCH
SCALE: 1.5:1

GENERAL TOLERANCES (UNLESS SPECIFIED)

	MM	INCH
4 PLACES	±	±
3 PLACES	±	± 0.005
2 PLACES	± 0.05	± 0.01
1 PLACE	± 0.1	± 0.02
0 PLACES	±	±
ANGULAR TOL	± 0.5 °	

DRAFT WHERE APPLICABLE MUST REMAIN WITHIN DIMENSIONS

CURRENT REV DESC: NOTES UPDATED, LABEL PRINTING ADDED

EC NO: 747270
DRWN: RSCHIEBER 2023/04/20
CHK'D: RSILLER 2023/04/27
APPR: RSILLER 2023/04/27

INITIAL REVISION:
DRWN: MZIELINS 2015/05/11
APPR: BWOODMAN 2015/06/03

THIRD ANGLE PROJECTION | DRAWING: C-SIZE | SERIES: 120108

molex

CSE MC 3P A-SIZE MA FE STR
SINGLE KEY 16AWG

PRODUCT CUSTOMER DRAWING

DOCUMENT NUMBER	DOC TYPE	DOC PART	REVISION
SD-120108-086	PSD	001	A2

MATERIAL NUMBER	CUSTOMER	SHEET NUMBER
SEE PART LIST	GENERAL MARKET	1 OF 2

PART LIST

MOLEX PN	ENGINEERING NO.	L+Tol.[mm]
1300108297	113030B35M005	500
1300108298	113030B35M010	1000
1300108299	113030B35M015	1500
1300108300	113030B35M020	2000
1300108301	113030B35M025	2500
1300108302	113030B35M030	3000
1300108303	113030B35M035	3500
1300108304	113030B35M040	4000
1300108305	113030B35M050	5000
1300108306	113030B35M060	6000
1300108307	113030B35M080	8000
1300108308	113030B35M100	10000
1300108309	113030B35M120	12000
1300108310	113030B35M150	15000
1300108311	113030B35M180	18000
1300108312	113030B35M200	20000
1300108313	113030B35M230	23000
1300108314	113030B35M250	25000
1300108315	113030B35M270	27000
1300108316	113030B35M300	30000
1300108317	113030B35M340	34000
1300108318	113030B35M380	38000
1300108319	113030B35M400	40000
1300108320	113030B35M420	42000
1300108321	113030B35M460	46000
1300108322	113030B35M500	50000
1300108323	113030B35M540	54000
1300108324	113030B35M570	57000
1300108325	113030B35M600	60000
1300108326	113030B35M610	61000
1300108327	113030B35M650	65000
1300108328	113030B35M700	70000
1300108329	113030B35M750	75000
1300108330	113030B35M800	80000
1300108331	113030B35M850	85000
1300108332	113030B35M900	90000
1300108333	113030B35M950	95000

PART NUMBER MATRIX

1	1	3	0	3	0	B	3	5	M	X	X	X

- 11 = Double ended cordset A-SIZE
- Poles: 3 = 3 Poles
- Heads style: 030 = male straight / female straight
- Cable: B35 = 1.50mm² TPU Black
- Units: M = Meter
- Length Examples: 005 = 0.5 m, 010 = 1 m, 020 = 2 m, 050 = 5 m, 100 = 10 m, 150 = 15 m, 200 = 20 m

CABLE LENGTH TOLERANCES
<.3M [1FT]: +19mm-0 [+.75in-0]
.3 - .9M [1 - 3FT]: +44.5mm-0 [+1.75in-0]
.9 - 1.8M [3 - 6FT]: +55.6mm-0 [+2.19in-0]
1.8 - 3.7M [6 - 12FT: +88.9mm-0 [+3.50in-0]
3.7 - 7.3M [12 - 24FT]: +165.1mm-0 [+6.50in-0]
7.3-14.6M [24 - 48FT]: +317.5mm-0 [+12.50in-0]
14.6 - 30.5M [48-100FT]: +622.3mm-0 [+24.50in-0]
OVER 30M [100FT] +2% OF FINISHED LENGTH

THIS DRAWING CONTAINS INFORMATION THAT IS PROPRIETARY TO MOLEX ELECTRONIC TECHNOLOGIES, LLC AND SHOULD NOT BE USED WITHOUT WRITTEN PERMISSION

FUNCTIONAL SYMBOLS: FA = 0, FC = 0, FP = 0
DIVISIONAL SYMBOLS

DIMENSION UNITS: MM/INCH
SCALE: 1:1

GENERAL TOLERANCES (UNLESS SPECIFIED)

	MM	INCH
4 PLACES	±	±
3 PLACES	±	± 0.005
2 PLACES	± 0.05	± 0.01
1 PLACE	± 0.1	± 0.02
0 PLACES	±	±
ANGULAR TOL	± 0.5 °	

DRAFT WHERE APPLICABLE MUST REMAIN WITHIN DIMENSIONS

CURRENT REV DESC: NOTES UPDATED, LABEL PRINTING ADDED

EC NO: 747270
DRWN: RSCHIEBER 2023/04/20
CHK'D: RSILLER 2023/04/27
APPR: RSILLER 2023/04/27

INITIAL REVISION:
DRWN: MZIELINS 2015/05/11
APPR: BWOODMAN 2015/06/03

THIRD ANGLE PROJECTION | DRAWING: C-SIZE | SERIES: 120108

molex

CSE MC 3P A-SIZE MA FE STR
SINGLE KEY 16AWG

PRODUCT CUSTOMER DRAWING

DOCUMENT NUMBER	DOC TYPE	DOC PART	REVISION
SD-120108-086	PSD	001	A2

MATERIAL NUMBER	CUSTOMER	SHEET NUMBER
SEE PART LIST	GENERAL MARKET	2 OF 2

DOCUMENT STATUS	P1	RELEASE DATE	2023/04/27 12:11:49

FORMAT: Eng-legs-master-lb-pro3-C
REVISION: E1
DATE: 2021/05/01