DRAWING MADE IN THIRD ANGLE PROJECTION

670785-1 ⇔ 670785-1

/home/us016926/DMTECmod

PART NUMBER	REV	FIRST USED
670785-1	R	1-471273-3

△1 RECOMMENDED SPARE PARTS.

△2 CRIMP HEIGHT FOR INITIAL SET-UP ONLY.

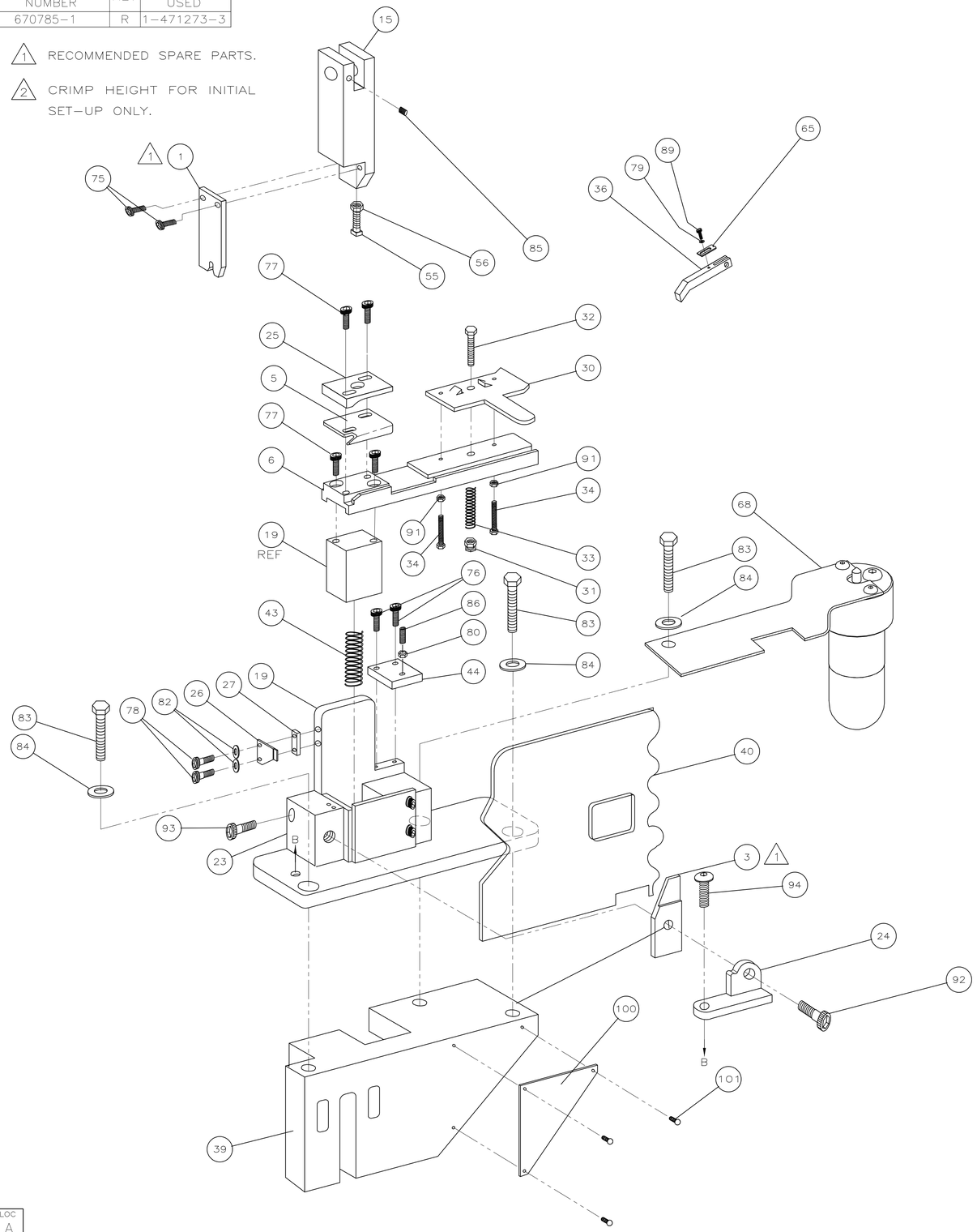

TERMINAL NAME: LENGTHWISE SPLICE		
		41962
		41996
		60689
		62357
		62592
TERM APPL SPEC 114-2088		

CRIMPING DATA	
CRIMP HEIGHT	WIRE SIZE
.099 △2	12
–	–
–	–
–	–

CRIMP	SIZE	TYPE	RANGE
WIRE	.180	F	4K – 10K CMA
INSUL	–	–	–

FEED	APPL INST	SET UP GAGE	LAYOUT
.300	408-8014	–	–

WIRE STRIP LENGTH .250-.280

–1	U/M	DWG SIZE	PART NO	DESCRIPTION	ITEM NO
				–	129
				–	128
				–	127
				–	126
				–	125
				–	124
				–	123
				–	122
				–	121
				–	120
				–	119
				–	118
				–	117
				–	116
				–	115
				–	114
				–	113
				–	112
				–	111
				–	110
				–	109
				–	108
				–	107
				–	106
				–	105
				–	104
				–	103
				–	102
3	–	–	21017-6	SCR, DRIVE (#4 X .25)	101
1	–	–	452373-1	PLATE, ID	100
–	–	–	–	–	99
–	–	–	–	–	98
–	–	–	–	–	97
–	–	–	–	–	96
–	–	–	–	–	95
1	–	A	1-21001-8	SCR, SHC 5/16-18 x .75	94
1	–	A	3-21001-4	SCR, SHC, 3/8-16 X .88	93
1	–	A	21001-5	SCR, SHC, 1/4-20 X .88	92
2	–	A	21018-7	NUT, HEX, 10-32	91
–	–	–	–	–	90
1	–	A	2-21000-5	SCR, SHC, 8-32 X .25	89
–	–	–	–	–	88
–	–	–	–	–	87
1	–	A	3-21000-9	SCR, SHC, 10-32 X 1.00	86
1	–	A	2-21549-3	SCR, SOC SET, 1/4-20 X .25	85
3	–	A	371178	WASHER, FLAT, 3/8	84
3	–	A	3-21015-2	SCR, HEX HD, 3/8-16 X 1.25	83
2	–	A	21055-7	WASHER, FLAT, 10	82
–	–	–	–	–	81
1	–	A	21018-7	NUT, HEX 10-32	80
1	–	A	21055-6	WASHER, FLAT, #8	79
2	–	A	3-21000-6	SCR, SHC, 10-32 X .62	78
4	–	A	3-21000-7	SCR, SHC, 10-32 X .75	77
2	–	A	3-21000-4	SCR, SHC, 10-32 X .38	76
2	–	A	21001-2	SCR, SHC, 1/4-20 X .62	75
–	–	–	–	–	74

REVISION OF EACH ASSY NO (WHEN BLANK, USE DWG REVISION)

PARTS LIST

–1	U/M	DWG SIZE	PART NO	DESCRIPTION	ITEM NO
–	–	–	–	–	73
–	–	–	–	–	72
–	–	–	–	–	71
–	–	–	–	–	70
					69
1	–	–	465184-2	LUBRICATOR ASSY	68
–	–	–	–	–	67
–	–	–	–	–	66
1	–	A	374999	TENSION ADJ PLATE	65
–	–	–	–	–	64
–	–	–	–	–	63
–	–	–	–	–	62
–	–	–	–	–	61
–	–	–	–	–	60
–	–	–	–	–	59
–	–	–	–	–	58
–	–	–	–	–	57
1	–	–	22202-1	NUT, HEX JAM, 1/4-20	56
1	–	–	21077-5	SCR, SQ HD SET, 1/4-20 X 1.00	55
–	–	–	–	–	54
–	–	–	–	–	53
–	–	–	–	–	52
–	–	–	–	–	51
–	–	–	–	–	50
–	–	–	–	–	49
–	–	–	–	–	48
–	–	–	–	–	47
–	–	–	–	–	46
–	–	–	–	–	45
1	–	–	372998	RETAINER,FEED PLATE	44
1	–	A	2-24017-7	SPRING SLIDE	43
–	–	–	–	–	42
–	–	–	–	–	41
1	–	–	460582-1	GUARD	40
1	–	C	570238	BASE CASTING	39
–	–	–	–	–	38
–	–	–	–	–	37
1	–	–	811432-1	FEED FINGER	36
–	–	–	–	–	35
2	–	A	372997	ADJ. SCREW,STOCK DRAG	34
1	–	A	23846-7	SPRING,STOCK DRAG	33
1	–	–	21015-8	STUD,STOCK DRAG	32
1	–	A	21022-4	NUT,STOCK DRAG HANDLE	31
1	–	–	372990	STOCK DRAG	30
–	–	–	–	–	29
–	–	–	–	–	28
1	–	–	379011	SPACER,CLEANER	27
1	–	–	810995-4	STRIPPER	26
1	–	–	376945	WIRE GUIDE	25
1	–	–	378975	AUX. ANVIL HOLDER	24
1	–	–	374348	ANVIL HOLDER	23
–	–	–	–	–	22
–	–	–	–	–	21
–	–	–	–	–	20
1	–	C	473933	APPLICATOR MOUNT ASSY	19
–	–	–	–	–	18
–	–	–	–	–	17
–	–	–	–	–	16
1	–	B	471057	RAM	15
–	–	–	–	–	14
–	–	–	–	–	13
–	–	–	–	–	12
–	–	–	–	–	11
–	–	–	–	–	10
–	–	–	–	–	9
–	–	–	–	–	8
–	–	–	–	–	7
1	–	A	386595	PLATE,FEED	6
△1 1	–	B	472672	BLADE,SHEAR	5
–	–	–	–	–	4
△1 1	–	B	373014	ANVIL	3
–	–	–	–	–	2
△1 1	–	C	453925-7	CRIMPER,WIRE	1

REVISION OF EACH ASSY NO (WHEN BLANK, USE DWG REVISION)

QTY REQD PER ASSY — PARTS LIST

P	F	LTR	REVISION RECORD	APP	DATE
		R1	ECR-14-004979	KH	4-14
		R	ECR-06-001949	GB	1-06
		P	0150-0886-00	CE	1-01
		N2	0150-6904-96,REACTIVATE	TB	5-96
		N1	0150-6780-96,OBS	TB	4-96
		N	0150-5843-94	TB	12-94
		M	0150-5215-94	CE	2-94

DIMENSIONS IN INCHES. DO NOT SCALE PRINT. TOLERANCES UNLESS OTHERWISE SPECIFIED: 2 PLC DEC ±– 3 PLC DEC ±– 4 PLC DEC ±– ANGLES ±– SURF TEXTURE: √ REMOVE BURRS, BREAK SHARP EDGES R.015 MAX

MATL – HT TR – FIN –

DR 5/17/93 R. LEHR/UTA APP 2-10-94 B WOLFE CHK 2-10-94 C ERISMAN REL 3/10/94 B. MORGAN

AMP Incorporated Harrisburg, PA 17105-3608

NAME END FEED STANDARD APPLICATOR MACHINE REF STD APPL

SCALE 1:4 D DWG NO 670785-1 SHEET 1 OF 1 REV R1

CAGE CODE 00779 CUSTOMER AND ASSEMBLY DRAWING RESTRICTED TO

LOC A DIST 4

THIS DRAWING IS A CONTROLLED DOCUMENT.

RELEASED FOR PUBLICATION 03JAN2001

© COPYRIGHT 2001 BY AMP INCORPORATED. ALL RIGHTS RESERVED.

AMP 1756 REV 12-89 Transcribed 070412.085723(YYMMDD)HHMMSS) from Comp=revision, Index=Module Revision=R 12:25:57 us016926