TOP VIEW

BACK VIEW

ISOMETRIC VIEWS

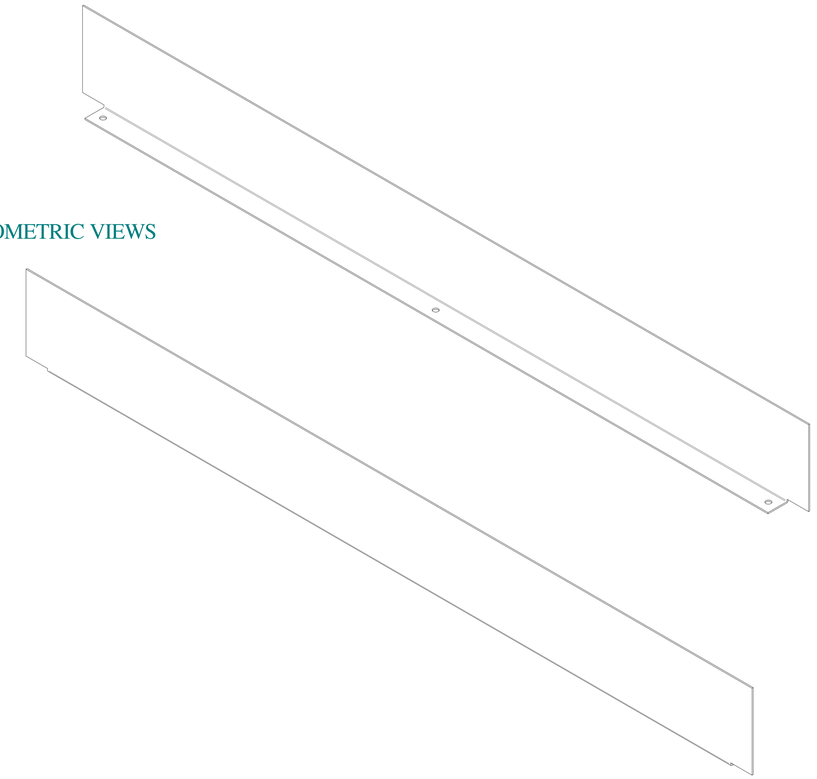

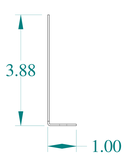

SIDE VIEW

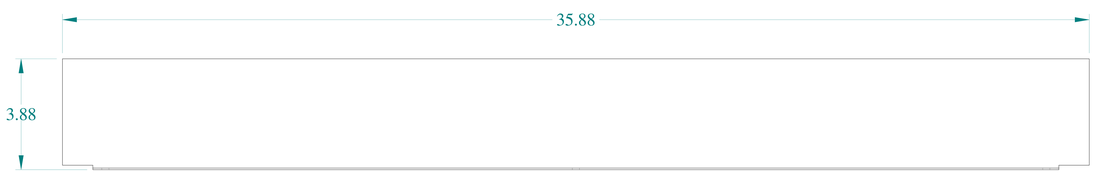

FRONT VIEW

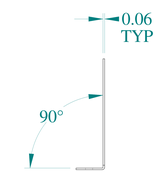

SIDE VIEW

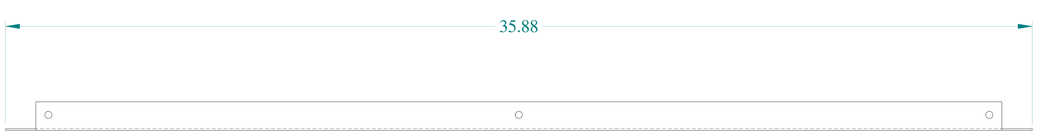

BOTTOM VIEW

HAMMOND MANUFACTURING®

www.hammondmfg.com

Data subject to change without notice.

Part # : CWBA436	Date : Mar. 22, 2019

Link:www.hammfg.com/CWBA436