REV.	DATE	DESCRIPTION
NC	03/08/05	UPDATE DRAWING FORMAT

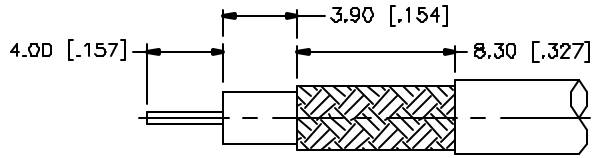

RECOMMENDED
CABLE STRIPPING DIM'S

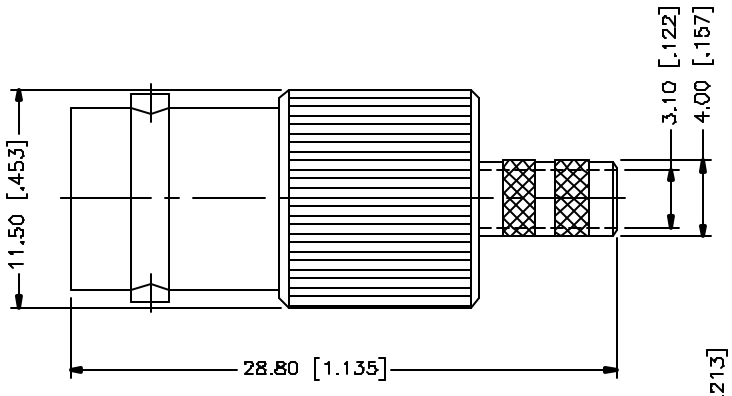

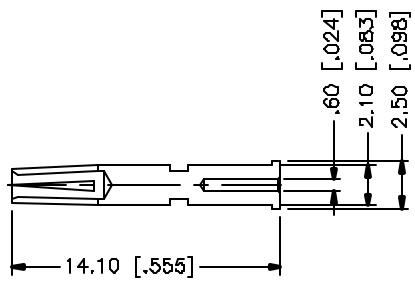

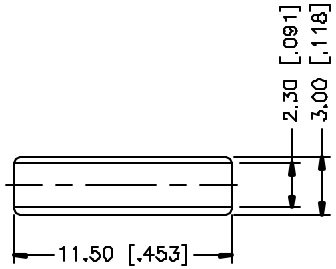

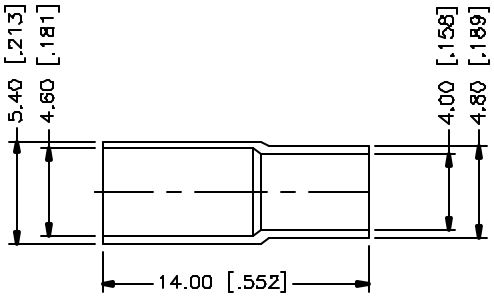

CRIMP NOTES:

1. CRIMPED FERRULE
   HEX CRIMP SIZE .187"
2. CRIMPED CONTACT PIN
   HEX CRIMP SIZE .068"

	DESCRIPTION	MATERIAL	FINISH	QTY
8				
7				
6				
5	FERRULE	COPPER	NICKEL	1
4	SLEEVE	DELRIN	NATURAL	1
3	INSULATOR	DELRIN	NATURAL	1
2	CONTACT PIN	PHOS. BRONZE	GOLD	1
1	HOUSING/BODY	BRASS	NICKEL	1

UNLESS OTHERWISE SPECIFIED DIMENSIONS ARE IN MILLIMETERS. DIMENSIONS IN [ ] ARE IN INCHES AND FOR CUSTOMER REFERENCE ONLY.

UNLESS OTHERWISE SPECIFIED TOLERANCES FOR MILLIMETERS ARE:
0.5 – 8mm ± 0.20mm
8 – 30mm ± 0.40mm
30 – 120mm ± 0.50mm

UNLESS OTHERWISE SPECIFIED TOLERANCES FOR INCHES ARE:
.020 – .316 = ± 0.007"
.315 – 1.180 = ± 0.015"
1.180 – 4.724 = ± 0.020"

DO NOT SCALE DRAWING

APPROVALS		DATE
DRAWN	G.R.S.	03/08/05
CHECKED		
ISSUED		
SHEET	1 OF 1	

CAD FILE C:/112/112638.DWG

Amphenol Connex

PART DESCRIPTION
BNC CRIMP JACK
(FOR B573945, Q841 MINI MAX 500 CABLE)

PART NO. 112638

DWG. NO. 112638.DWG | REV. NC | SIZE A | SCALE NA