THIS DRAWING IS UNPUBLISHED. RELEASED FOR PUBLICATION - .- .
© COPYRIGHT - TE Connectivity ALL RIGHTS RESERVED.

REVISIONS

P	LTR	DESCRIPTION	DATE	DWN	APVD
	C2	REVISED PER ECO-09-021826	07JAN10	KK	AEG
	C3	REVISED PER ECO-17-009871	07JUL2017	RS	JO
	D	REVISED PER ECO-17-016552	21NOV2017	RS	JO
	D1	REVISED PER ECO-17-017496	01DEC2017	RS	JO

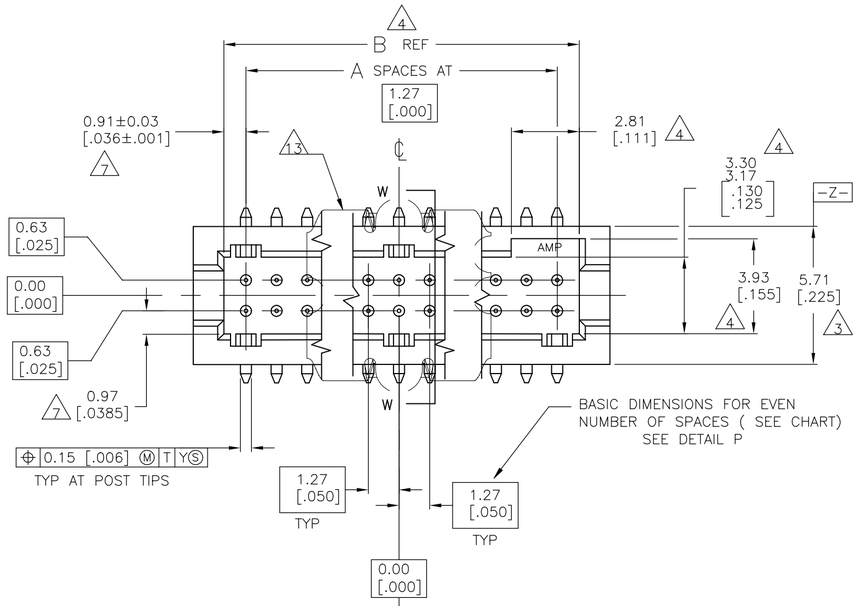

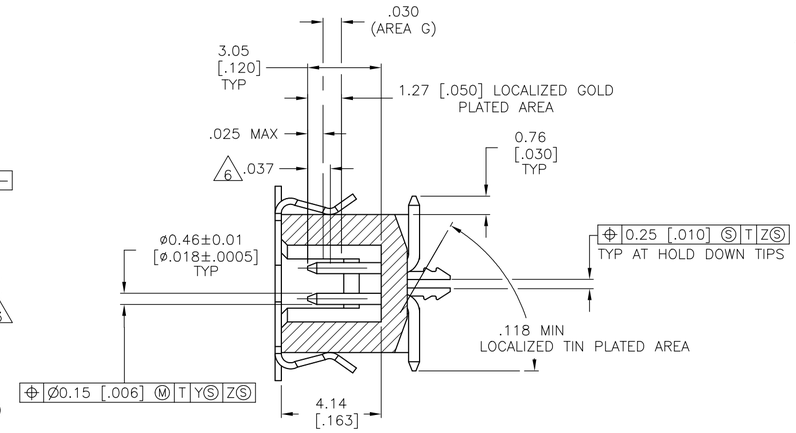

SECTION W-W

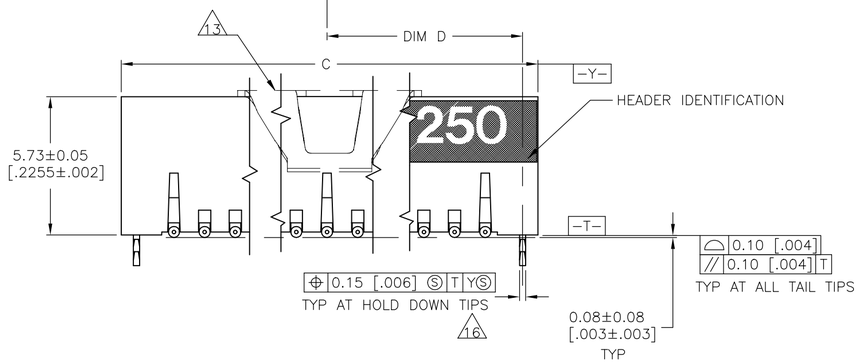

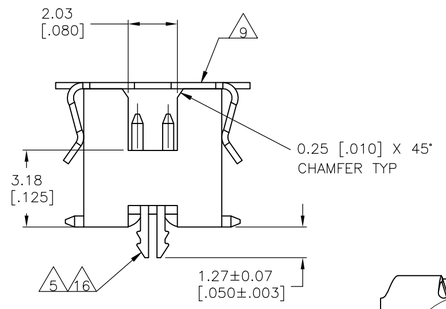

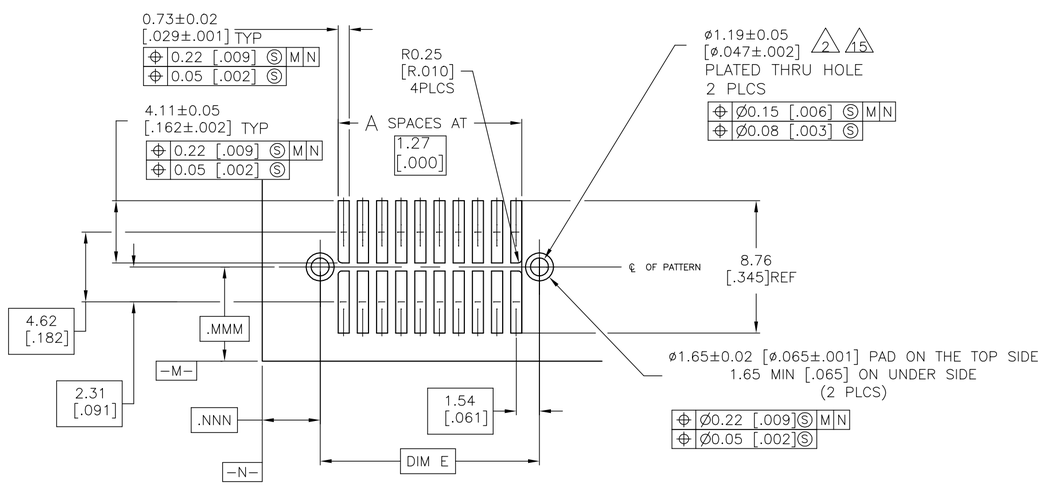

RECOMMENDED BOARD LAYOUT
SCALE- 5:1

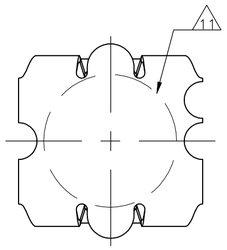

VACUUM COVER

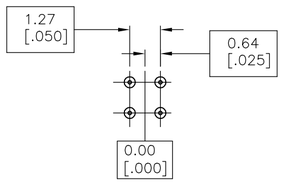

DETAIL P

BASIC DIMENSIONS FOR ODD NUMBER OF SPACES

1. 0.00076[.000030] GOLD AT POINT OF MEASUREMENT, 0.00051[.000020] MIN AT THE END POINTS OF AREA G, (LOCALIZED PLATE AREA), 0.0038[.000150] TIN-LEAD ON LOCALIZED TIN-LEAD PLATED AREA, ALL OVER 0.0013[.000050] NICKEL
2. USE 1.55±0.02 [.0610±.0010] DRILLED HOLE (1.55mm DRILL). FINISH TO BE TIN-LEAD OVER 0.02 [.001] MIN COPPER.
3. DIMENSION APPLIES AT BASE OF SHROUD.
4. THE NOTED DIMENSIONS APPLY AT THE MATING FACE OF THE HOUSING.
5. 0.0038 [.000150] TIN-LEAD ON HOLD DOWN,ALL OVER 0.0013 [.000050] NICKEL.
6. POINT OF MEASUREMENT.
7. DIMENSIONS NOTED APPLY FROM THE BASIC DIMENSION LINE (NOT THE CIRCUIT CAVITY CENTER LINE) TO THE SURFACE INDICATED.
8. IF PLANNING TO USE MORE THAN ONE MATING PAIR OF CONNECTORS TO INTERCONNECT 2 BOARDS, PLEASE REFER TO PARA. 3.3 IN THE APPLICATION SPEC, #114-7010
9. VACUUM COVER DESIGNED FOR 4.0 [.160] DIA NOZZLE. VACUUM COVER TO BE REMOVED AFTER SOLDERING.
10. PACKAGED IN EIA 481 TAPE AND REEL. SEE TABLE FOR TAPE WIDTHS.
11. 5.5 [.216] MIN TARGET AREA FOR VACUUM PICK-UP.
12. HOUSING: LCP, COLOR-BLACK.
POST: PHOSPHOR BRONZE.
VACUUM COVER: ALUMINUM.
13. VACUUM COVER SHOWN IN PHANTOM LINE.
14. 0.00076[.000030] GOLD AT POINT OF MEASUREMENT, 0.00051[.000020] MIN AT THE END POINTS OF AREA G, LOCALIZED PLATE AREA, 0.0038[.000150] TIN ON LOCALIZED TIN PLATED AREA, ALL OVER 0.00127[.000050] NICKEL
15. USE 1.55±0.02 [.0610±.0010] DRILLED HOLE (1.55mm DRILL). WITH 0.02 (.001) MIN COPPER.
16. 0.00381 (.000150) TIN ON HOLDDOWN, ALL OVER 0.00127 (.000050) NICKEL.
17. OBSOLETE PARTS: OBSOLETE CIS STREAMLINING PER D.RENAUD/D.SINISI

		FINISH	TAPE WIDTH	E	D	C	B	A	NUMBER OF POSITIONS	PART NUMBER
	OBSOLETE 17	14	88 mm	65.33 [2.572]	32.66 [1.286]	66.59 [2.622]	64.05 [2.522]	49	100	5-147381-9
	OBSOLETE 17	14	72 mm	52.63 [2.072]	26.31 [1.036]	53.89 [2.122]	51.35 [2.022]	39	80	~~5-147381-8~~
	OBSOLETE 17	14	72 mm	46.28 [1.822]	23.13 [.911]	47.54 [1.872]	45.00 [1.772]	34	70	~~5-147381-7~~
		14	56 mm	39.93 [1.572]	19.96 [.786]	41.19 [1.622]	38.65 [1.522]	29	60	5-147381-6
		14	56 mm	33.58 [1.322]	16.78 [.661]	34.84 [1.372]	32.30 [1.272]	24	50	5-147381-5
		14	44 mm	27.23 [1.072]	13.61 [.536]	28.49 [1.122]	25.95 [1.022]	19	40	5-147381-4
		14	32 mm	20.88 [.822]	10.43 [.411]	22.14 [.872]	19.60 [.772]	14	30	5-147381-3
		14	24 mm	14.53 [.572]	7.26 [.286]	15.79 [.622]	13.25 [.522]	9	20	5-147381-2
		14	24 mm	8.18 [.322]	4.08 [.161]	9.44 [.372]	6.90 [.272]	4	10	5-147381-1
	OBSOLETE 17	1	88 mm	65.33 [2.572]	32.66 [1.286]	66.59 [2.622]	64.05 [2.522]	49	100	147381-9
	OBSOLETE 17	1	72 mm	52.63 [2.072]	26.31 [1.036]	53.89 [2.122]	51.35 [2.022]	39	80	~~147381-8~~
		1	72 mm	46.28 [1.822]	23.13 [.911]	47.54 [1.872]	45.00 [1.772]	34	70	147381-7
	SUPERCEDED BY 5-147381-6 17	1	56 mm	39.93 [1.572]	19.96 [.786]	41.19 [1.622]	38.65 [1.522]	29	60	147381-6
		1	56 mm	33.58 [1.322]	16.78 [.661]	34.84 [1.372]	32.30 [1.272]	24	50	147381-5
		1	44 mm	27.23 [1.072]	13.61 [.536]	28.49 [1.122]	25.95 [1.022]	19	40	147381-4
	OBSOLETE 17	1	32 mm	20.88 [.822]	10.43 [.411]	22.14 [.872]	19.60 [.772]	14	30	~~147381-3~~
		1	24 mm	14.53 [.572]	7.26 [.286]	15.79 [.622]	13.25 [.522]	9	20	147381-2
		1	24 mm	8.18 [.322]	4.08 [.161]	9.44 [.372]	6.90 [.272]	4	10	~~147381-1~~
	OBSOLETE	1	24 mm	8.18 [.322]	4.08 [.161]	9.44 [.372]	6.90 [.272]	4	10	~~147381-1~~

THIS DRAWING IS A CONTROLLED DOCUMENT.

DIMENSIONS: mm [INCHES]

TOLERANCES UNLESS OTHERWISE SPECIFIED:
0 PLC ± -
1 PLC ± -
2 PLC ± -
3 PLC ± 0.13[.005]
4 PLC ± -
ANGLES ± -

MATERIAL 12
FINISH SEE TABLE

DWN B. HAYMAKER 28JAN00
CHK J. MOSIER 28JAN00
APVD J. MOSIER 28JAN00
PRODUCT SPEC 108-1332
APPLICATION SPEC 114-7010
WEIGHT -

TE Connectivity

NAME HEADER ASSEMBLY,SURFACE MOUNT, AMPMODU 50/50 GRID (6.35 [.250] MATED HEIGHT)

SIZE A1 | CAGE CODE 00779 | DRAWING NO C-147381 | RESTRICTED TO -

CUSTOMER DRAWING | SCALE 8:1 | SHEET 1 OF 1 | REV D1

4805 (1/15)