Features:

- Motor: Brushless DC
- Motor Protection: Impedance Protected
- Bearing Type: Two Ball, Sleeve, or Hydro Dynamic
- Connection: UL 1007 AWG 24, 300mm Wire Leads
- Frame Material: Plastic UL94V-0
- Impeller Material: Plastic UL94V-0
- Operating Temp:
  - Two Ball: -10°C~70°C
  - Sleeve: -10°C~60°C
  - Hydro Dynamic: -10°C~70°C
- Life Expectancy:
  - Two Ball: 70,000 Hours
  - Sleeve: 30,000 Hours
  - Hydro Dynamic: 50,000 Hours

Fan-S Division

RoHS Compliant

Model No.	Volt.	Current	Power	Rated Speed	Maximum AirFlow		Maximum Static Pressure		Noise Level	Weight
	(VDC)	(A)	(W)	(rpm)	(CMM)	(CFM)	(InAq)	(mmAq)	(dB/A)	(g)
FAD1-08025C * AW11	12	0.05	0.60	1600	0.582	20.570	0.043	1.092	16.5	86.0
FAD1-08025C * LW11	12	0.08	0.96	2100	0.764	27.019	0.072	1.828	22.3	86.0
FAD1-08025C * MW11	12	0.12	1.44	2500	0.916	32.384	0.102	2.590	29.4	86.0
FAD1-08025C * HW11	12	0.21	2.52	3000	1.093	38.648	0.142	3.606	35.2	86.0
FAD1-08025C * JW11	12	0.23	2.76	3400	1.225	43.291	0.167	4.241	37.4	86.0
FAD1-08025D * LW11	24	0.04	0.96	2100	0.764	27.019	0.072	1.828	22.3	86.0
FAD1-08025D * MW11	24	0.07	1.68	2500	0.916	32.384	0.102	2.590	29.4	86.0
FAD1-08025D * HW11	24	0.10	2.40	3000	1.093	38.648	0.142	3.606	35.2	86.0

* Indicates "B" (Ball Bearing), "S" (Sleeve), or "H" (Hydro Dynamic)
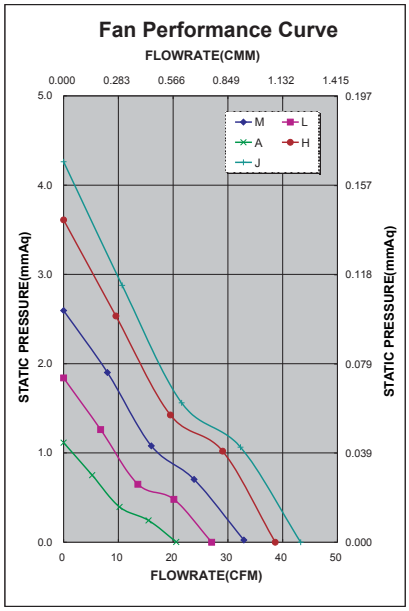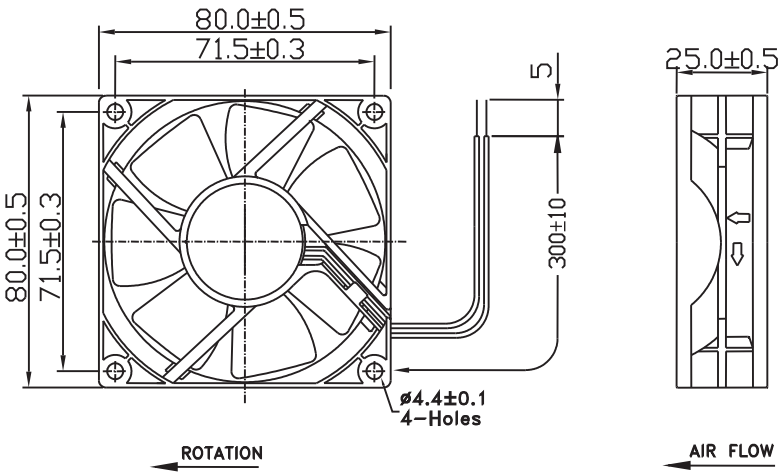
Noise is measured at the distance of one (1) meter from the axis of intake.