K44P Make & Break Load Switching — 8 kV Relays

Product Facts

- **Single pole, single throw contacts with latching actuator**
- **Vacuum dielectric for power switching low current loads**
- **20 G vibration rating**
- **Carries 50 Amps at DC**
- **Space rated versions available**
- **Meets requirements of MIL-R-83725**

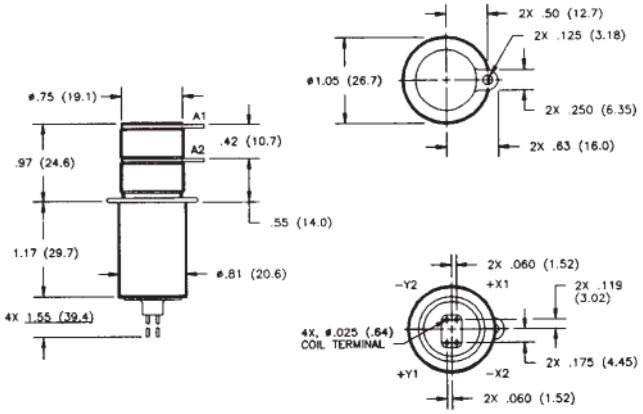

Product Specifications

Contact Arrangement — SPST-Latching

Contact Form — P

Test Voltage, DC or 60 Hz (Peak) — 10 kV

Rated Operating Voltage (Peak) —
DC or 60 Hz — 8 kV
2.5 MHz — 7 kV
16 MHz — 6 kV
32 MHz — 4 kV

Continuous Carry Current, Max. —
DC or 60 Hz — 50 A
2.5 MHz — 40 A
16 MHz — 25 A
32 MHz — 20 A
Coil Hi-Pot (Vrms, 60 Hz) — 500 A

Contact Capacitance —
Between Open Contacts — 2.5 pF
Open Contacts to Ground — 2.8 pF

Contact Resistance, Max. — 0.01 ohm

Operate Time, Max. — 5 ms

Release Time, Max. — N/A

Shock, 11ms, 1/2 Sine (Peak) — 50 g

Vibration —
Peak — 20 g (55 to 2000 Hz)

Operating Ambient Temperature Range — -55°C to +85°C

Mechanical Life — 1 million cycles

Weight, Nominal — 59.53 g (2.1 oz.)

Coil Data

Volts, Nominal	26.5 Vdc
Latch & Reset, Max.	23 Vdc
Dropout	N/A
Coil Resistance (±10%)	155 Ω

Ratings listed are for 25°C, sea level conditions

Ordering Information

Sample Part Number ▶ **K44 P 3 3 4**

Series:

Contact Form:
P = SPST-Latching

Coil Voltage:
3 = 26.5 Vdc, Bus Wire

High Voltage Connections:
3 = Solder Connection

Mounting:
2 = Flanged 4 = Standard

***See page 7-87 for mounting methods.**

For factory-direct application assistance, dial 800-253-4560, ext. 2055, or 805-220-2055.

Catalog 5-1773450-5
Revised 3-13

www.te.com

Dimensions are shown for reference purposes only. Specifications subject to change.

Dimensions are in millimeters unless otherwise specified.

USA: +1 800 522 6752
Asia Pacific: +86 0 400 820 6015
UK: +44 800 267 666

For additional support numbers please visit www.te.com