PART NAME	FLOATING INTERNAL MOUNTING PANEL	PART No.	DPX-287134	REV. DATE	2/20/21

MATERIAL:
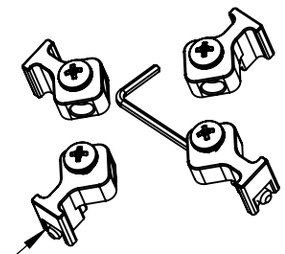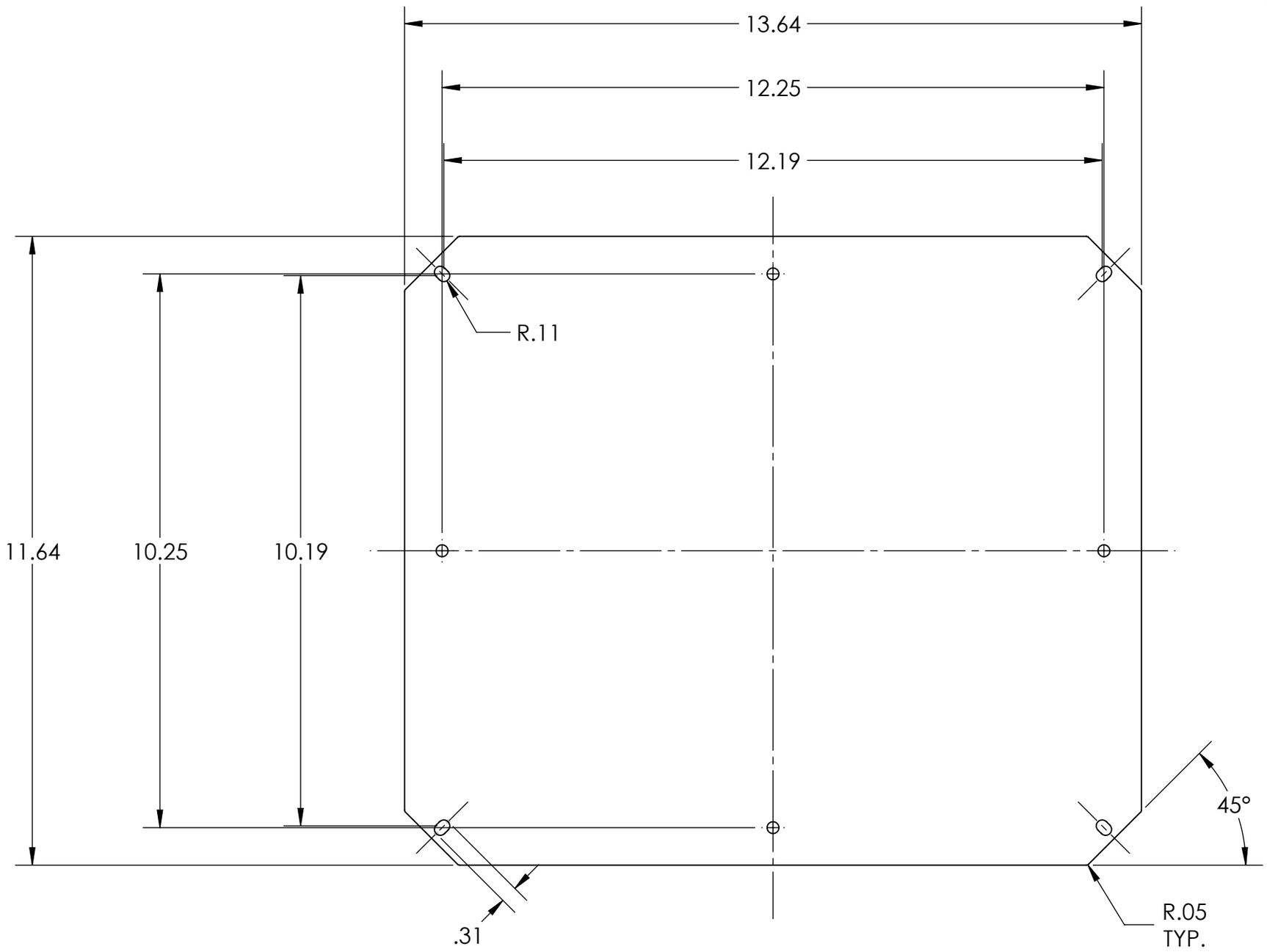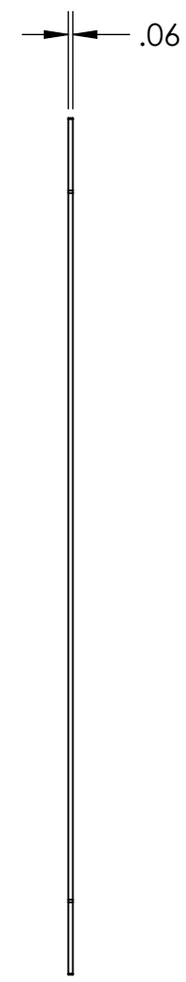
1. ALUMINUM (.06 THK.) (1.524mm THK.)
2. ALL DIMENSION HAVE A ±.015 TOLERANCE UNLESS OTHERWISE SPECIFIED
3. FITS DPH-28713, DPS-28713
4. SUPPLIED WITH DPX-444 KIT (INCLUDES 4-#10-32 X.25" MACHINE SCREWS)