CABLE LENGTH TOLERANCES
>.3M [1FT]: +19mm-0 [+.75in-0]
.3 - .9M [1 - 3FT]: +44.5mm-0 [+1.75in-0]
.9 - 1.8M [3 - 6FT]: +55.6mm-0 [+2.19in-0]
1.8 - 3.7M [6 - 12FT: +88.9mm-0 [+3.50in-0]
3.7 - 7.3M [12 - 24FT]: +165.1mm-0 [+6.50in-0]
7.3-14.6M [24 - 48FT]: +317.5mm-0 [+12.50in-0]
14.6 - 30.5M [48-100FT]: +622.3mm-0 [+24.50in-0]
OVER 30M [100FT] +2% OF FINISHED LENGTH

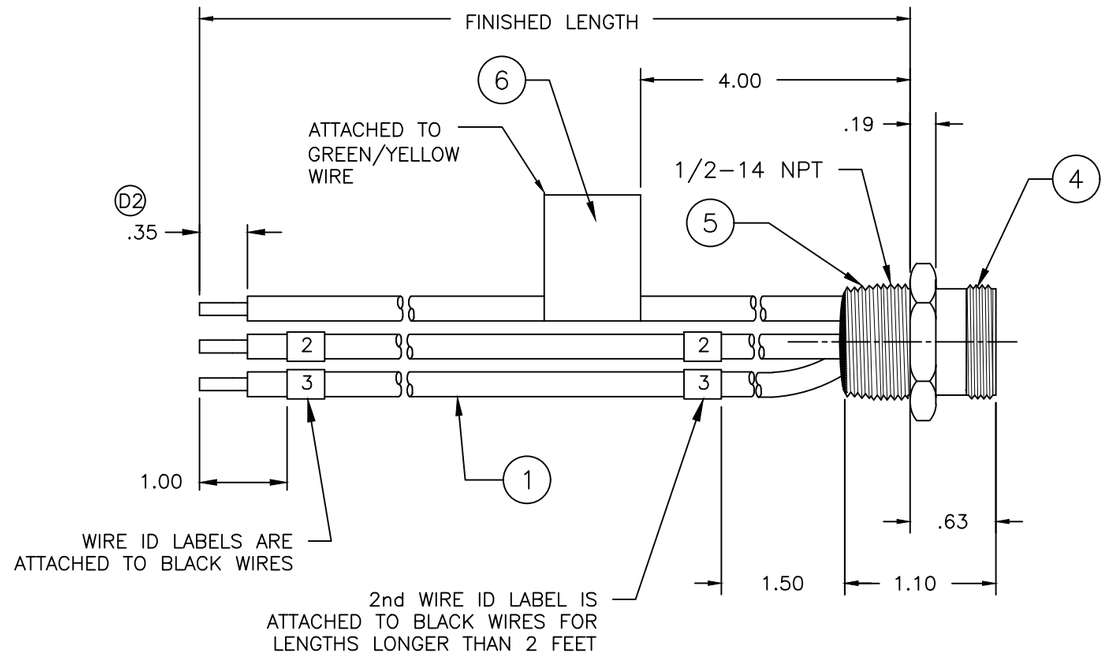

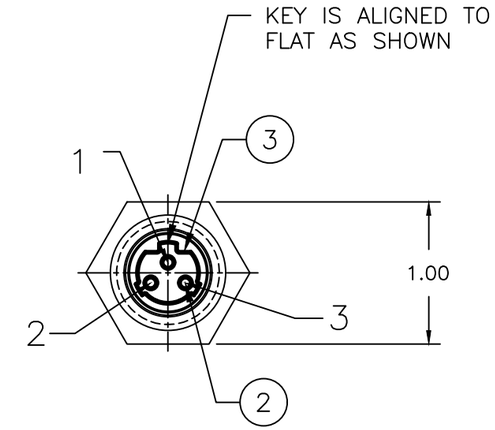

MALE FACE VIEW

NOTES:
1. MATERIAL: AS NOTED
2. FINISH: AS NOTED
3. ELECTRICAL:
   VOLTAGE: 500V PER IEC60664
   600V PER UL2237
   CURRENT: 15A
4. TEMP RATING: -20°TO +90°C
5. PROTECTION: IP67 (WHEN MATED)
6. COUPLING THREAD: 7/8-16UN
7. UL LISTED FILE: E258922
8. ALL DIMS ARE FOR REFERENCE UNLESS NOTED OTHERWISE

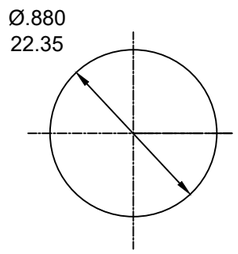

REF. KNOCKOUT HOLE

1R3106A83M005G

Wire type
14 AWG

LEAD LENGTH
M005 = 0.5 METER
M010 = 1 METER
M100 = 10 METER

GREEN/YELLOW	1
BLACK #2	2
BLACK #3	3

WIRING DIAGRAM

PART NO.	ENGINEERING NO.	FINISHED LENGTH
1300660326	1R3106A83M005G	0.5M+44.5mm-0 [19.69 IN +1.75-0]

ITEM	DESCRIPTION	MATERIAL	FINISH
6	FLAG LABEL	VINYL	BLACK/YELLOW
5	POTTING MATERIAL	EPOXY	
4	WIRE, 14 AWG (UL1015)	PVC INSULATION	SEE WIRE DIAGRAM
3	CONTACT PIN	COPPER ALLOY	GOLD PLATED
2	MALE INSERT	TPE	BLACK
1	RECEPTACLE SHELL	ZINC DIE-CAST	BLACK

DOCUMENT STATUS | P1 | RELEASE DATE | 2020/04/09 18:55:45

SYMBOLS: = 0 (5) = 0 (4) = 0 (3) = 0 (2) = 0 (1) = 0 = 0 = 0 = 0

THIS DRAWING CONTAINS INFORMATION THAT IS PROPRIETARY TO MOLEX ELECTRONIC TECHNOLOGIES, LLC AND SHOULD NOT BE USED WITHOUT WRITTEN PERMISSION

DIMENSION UNITS: INCH | SCALE: 1:1

GENERAL TOLERANCES (UNLESS SPECIFIED)

	mm	INCH
4 PLACES	±----	±----
3 PLACES	±----	±----
2 PLACES	±----	±----
1 PLACE	±----	±----
0 PLACES	±----	±----
ANGULAR TOL	± ---- °	

DRAFT WHERE APPLICABLE MUST REMAIN WITHIN DIMENSIONS

CURRENT REV DESC: .35 WAS .38

EC NO: 635317
DRWN: RSTONE 2020/04/03
CHK'D: ALEON01 2020/04/06
APPR: BWOODMAN 2020/04/09

INITIAL REVISION:
DRWN: TWOLDEGE 2016/06/22
APPR: BWOODMAN 2016/12/01

THIRD ANGLE PROJECTION | DRAWING: B-SIZE | SERIES: 130066

molex

MINI-CHANGE BRAD POWER RECEPTACLE
3P MALE, TRI-KEY, #14, PVC WIRES

PRODUCT CUSTOMER DRAWING

DOCUMENT NUMBER	DOC TYPE	DOC PART	REVISION
SD-130066-072	PSD	001	D2

MATERIAL NUMBER	CUSTOMER	SHEET NUMBER
SEE P/N CHART	GENERAL MARKET	1 OF 1

FORMAT: IN-ACAD-tb-prod-B
REVISION: A1
DATE: 2019/06/12