THIS DRAWING IS UNPUBLISHED. RELEASED FOR PUBLICATION -
© COPYRIGHT - ALL RIGHTS RESERVED.

LOC	DIST
A1	-

REVISIONS

P	LTR	DESCRIPTION	DATE	DWN	APVD
	P2	REVISED PER ECO-11-005150	31MAR2011	RK	HMR
	P3	-7 AND -6 VARIENT OBSOLETED	09JUN2017	SCK	KRAUSS

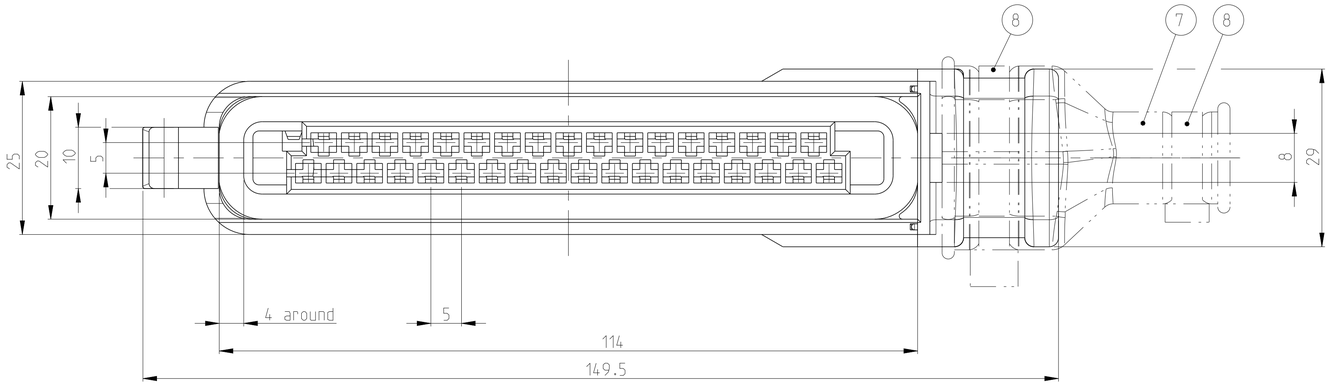

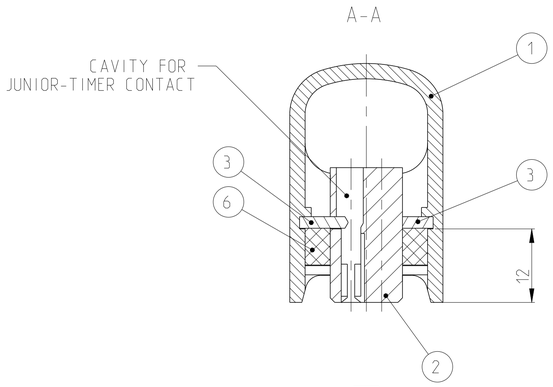

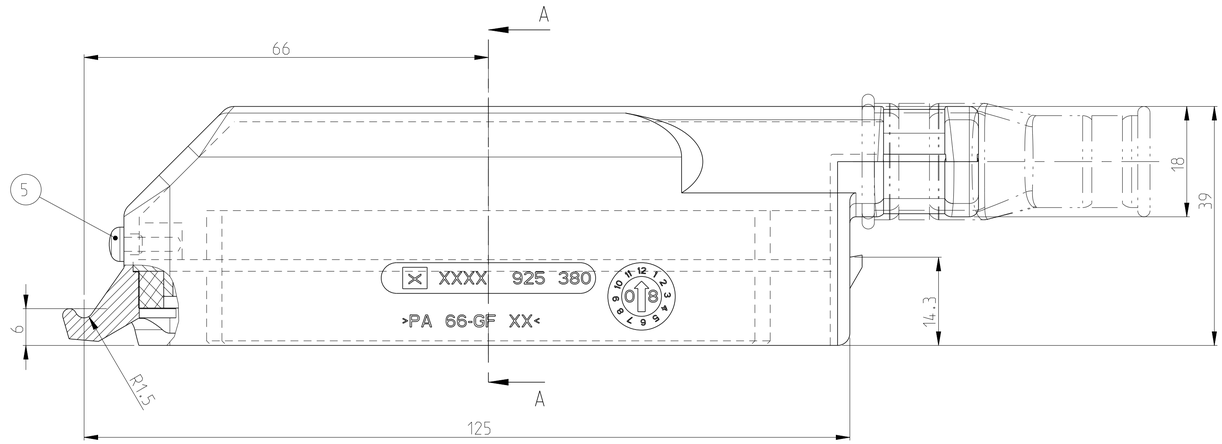

P3

REVISION	-	P	P	P	P	P	P					
	826000-7	826000-6	826000-5	826000-4	826000-3	826000-2	826000-1					
	OBSOLETED	OBSOLETED										
ASSY - NO.												
	2x		2x			2x		4-160975-2	B	CABLE TY.	BLACK	8
	1x		1x			1x		925311-1	A	BUSHING	BLACK	7
	1x	1x						827201-1	B	SEALING	POLYNORBOREN	6
			1x	1x				825381-2	C	SEALING	CR NATUR	6
					1x	1x		825381-1	A	SEALING	CR BLACK	6
	1x	1x	1x	1x	1x	1x	1x	826780-2	-	SHEET METAL SCREW	BZ 2.9x9.5 DIN7981	5
	2x	2x	2x	2x	2x	2x	2x	928544-1	D	RETAINING LEDGE	PA 6.6 GFV30 BLACK	3
	1x	1x	1x	1x	1x	1x	1x	925379-1	E	35POS. HOUSING	PA 6.6 GFV13 BLACK	2
	1x	1x						925380-3	F	CONNECTOR HSG.	PA 6.6 GV13 YELLOW	1
			1x	1x	1x	1x	1x	925380-1	F	CONNECTOR HSG.	PA 6.6 GFV13 BLACK	1
	QUANTITY 'X'							PART NUMBER	REV	NAME	REMARKS	ITEM NO

NOTES
Bemerkungen

1. Bei Bestellung nach ASSY-NO. 826000- ... werden die Teile unmontiert in Mini Grip Beutel geliefert
(PARTS UNASSEMBLIED PACKAGED INTO MINI-GRIP-BAG IF PN 826 000-...IS ORDERED)

2. Bei Bestellung von Einzelteilen werden die Teile je nach Bestellmenge im Karton verpackt geliefert
(IF SINGLE PN'S ARE ORDERED, THE PARTS PACKAGED ACC. TO THE ORDER AMOUNT IN CARTON)

THIS DRAWING IS A CONTROLLED DOCUMENT.

DIMENSIONS: mm

TOLERANCES UNLESS OTHERWISE SPECIFIED:
0 PLC ±
1 PLC ±
2 PLC ±
3 PLC ±
4 PLC ±
ANGLES ±1°

MATERIAL: SEE TABLE
FINISH: -

DWN Haß 07JUN1975
CHK Stredak,F. 16JAN2009
APVD Bleicher,M. 19JAN2009
PRODUCT SPEC -
APPLICATION SPEC -
WEIGHT -

TE Connectivity

NAME: 35POS. HOUSING FOR JUNIOR-TIMER CONTACT
-

SIZE	CAGE CODE	DRAWING NO	RESTRICTED TO
A1	00779	C-826000	-

CUSTOMER DRAWING | SCALE 2:1 | SHEET 1 OF 1 | REV P3