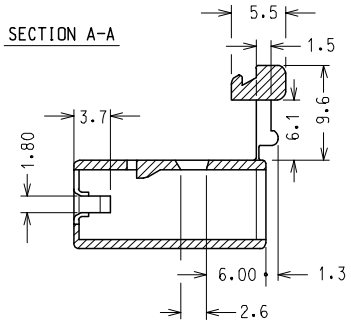

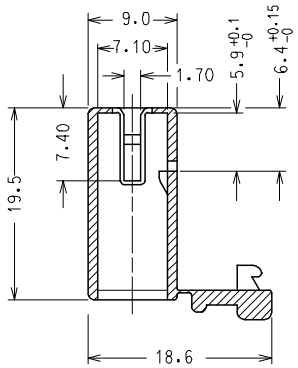

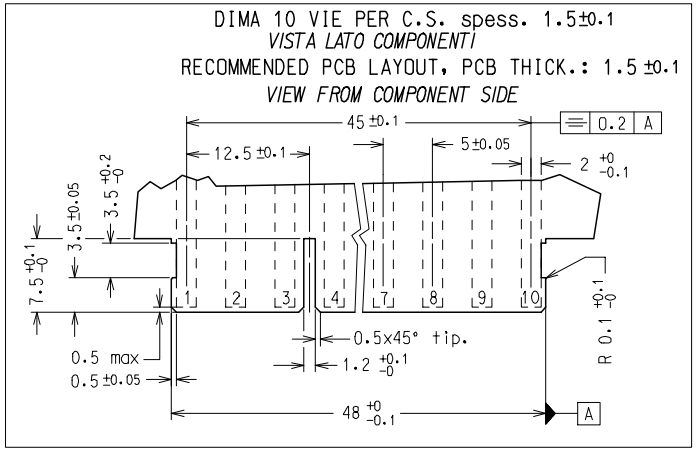

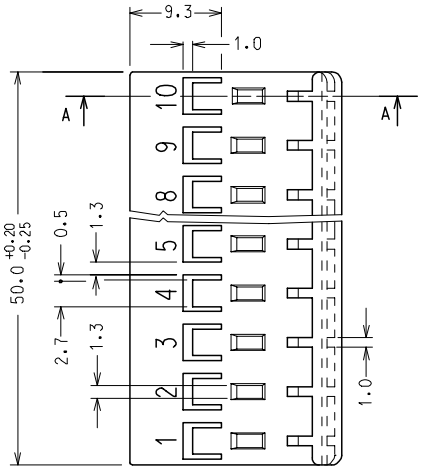

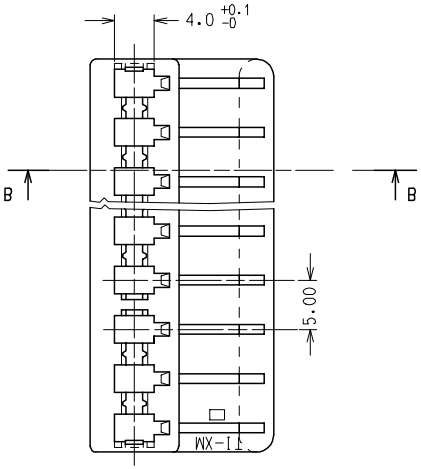

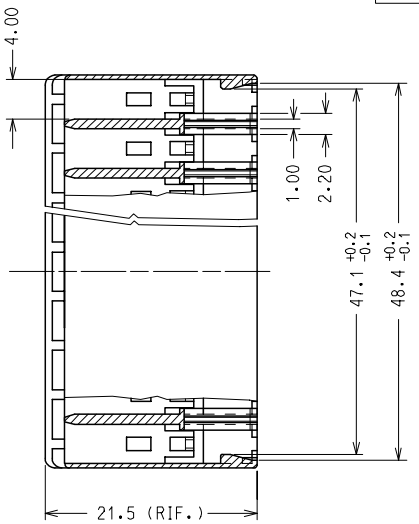

NOTA: LE DIMENSIONI VANNO MISURATE CON CORPI STABILIZZATI.

(AUMENTO IN PESO DEL 2.7 %)

NOTE: PARTS SHALL BE DIMENSIONALLY CHECKED AFTER ATTAINING EQUILIBRIUM CONDITIONS E.G. 2.7 % INCREASE IN WEIGHT FOR HUMIDITY ABSORPTION FROM DRY STATUS.

CARATTERISTICHE PRODOTTO SECONDO PS-94529

PRODUCT CHARACTERISTICS ACCORDING TO PS-94529 E

CONFEZIONE: 2200 pz. IN SCATOLA

PACKAGING: 2200 pcs IN CARTON BOX

CODICE P/N	MATERIAL
94529-9110	NYLON 6.6 NATURAL UL 94 V2 GWT 850 °C
94529-7110	PA 6.6 NATURAL UL94 V0
94529-4110	NYLON 6.6 GWT 750 °C sec. IEC 60335-1 TEST METHOD IEC 60695-2-11 NATURAL

SPQ: 2200 pz.

Descr.Std: HSG FOR FORK TERMINAL 10 CKT

EC NO: Z2007-0038
DRWN: SBARBIER 2006/09/20
CHKD: RSANDANO 2006/09/20
APPR: FBISELLO 2006/09/25

REV: A5

DESCRIPTION

QUALITY SYMBOLS

▼ - 0

(C) - 0

GENERAL TOLERANCES (UNLESS SPECIFIED)

	mm	INCH
4 PLACES	± ---	± ---
3 PLACES	± ---	± ---
2 PLACES	± 0.10	± ---
1 PLACE	± 0.2	± ---
ANGULAR ± 2 °		

DRAFT WHERE APPLICABLE

MUST REMAIN WITHIN DIMENSIONS

SCALE: 2:1

DESIGN UNITS: METRIC

FIRST ANGLE PROJECTION

REVISE ON CAD ONLY

DIMENSION STYLE: MM ONLY

DRAWN BY: FGOTTARD — DATE: 1999/01/11

CHECKED BY: SSORATO — DATE: 1999/01/11

APPROVED BY: RMARTUCC — DATE: 1999/01/11

TITLE: 10 CKT HOUSING FOR STRAIGHT FORK TERMINAL

molex MOLEX INCORPORATED

MATERIAL NO.: SEE TABLE

DOCUMENT NO.: SD-94529-021

SHEET NO.: 1 OF 1

THIS DRAWING CONTAINS INFORMATION THAT IS PROPRIETARY TO MOLEX INCORPORATED AND SHOULD NOT BE USED WITHOUT WRITTEN PERMISSION

A3

tb_frame_A3_P_AM
rev. B1 2000/08/01