PART NUMBER	REV	FIRST USED	TERMINATOR	FEED TYPE	DESCRIPTION
1426465 –1	B	–	LEADMAKER	MECH POST FEED	CUTS CARRIER
1426465 –2	B	–	BENCH	MECH PRE FEED	CUTS CARRIER
1426465 –6	B	–	LEADMAKER	MECH POST FEED	CONTINUOUS CARRIER
7–1426465 –1	B	–	LEADMAKER	MECH POST FEED	–1 AND SPARE PARTS
7–1426465 –2	B	–	BENCH	MECH PRE FEED	–2 AND SPARE PARTS
7–1426465 –6	B	–	LEADMAKER	MECH POST FEED	–6 AND SPARE PARTS
7–1426465 –7	A	–	–	–	SPARE PARTS KIT

CRIMP DATA AMP TERMINAL AMP CRIMP SPECS

TERMINAL NAME: TAB 5.8 X 0.8 ASSEMBLY. △4

CRIMP	SIZE	TYPE	RANGE
WIRE	3.30 [.130 IN]	F	>2.5mm² – 4.0mm²
INSUL	6.60 [.260 IN]	0	6.00 MAX [.236 IN MAX]

WIRE STRIP LENGTH 5.05–6.05 [.199–.238 IN]

APPL INSTRUCTION 408–8322

TERMINAL – –
APPL SPEC 114–18052 –

FEED 19.50 [.768 IN]

TERMINALS APPLIED

TERMINAL	SEAL	–	–	–
964314	963245	–	–	–
–	–	–	–	–
–	–	–	–	–
–	–	–	–	–
–	–	–	–	–
–	–	–	–	–
–	–	–	–	–

WIRE SIZE mm² AWG	CRIMP HEIGHT	PIN PN AND LENGTH [IN]
4.0mm²	2.34 ±0.05 [.092 ±.002 IN]	4–354778–5 [.2720]
–	–	–
–	–	–
–	–	–
–	–	–
–	–	–
–	–	–
–	–	–
–	–	–
–	–	–
–	–	–
–	–	–
–	–	–
–	–	–

SET UP GAGE	LAYOUT
458637–3	L1426465

△1 RECOMMENDED SPARE PARTS.
2. GREASE RAM, CAM, CAM FOLLOWER AND FEED ROD LIGHTLY.
3. LUBRICATE DAILY PER THE APPLICATOR INSTRUCTION SHEET SUPPLIED WITH THE APPLICATOR.
△4 THIS APPLICATOR APPLIES TERMINAL WITH A SEAL. INSULATION DIA QUOTED IS OUTSIDE DIAMETER OF SEAL. WIRE INSULATION DIA IS DEPENDENT ON SEAL BEING APPLIED. FULL TERMINAL INSULATION DIA RANGE 3.4–4.5mm[.134–.177IN]. SEAL P/N 963245 INSULATION DIA RANGE 3.4–3.7mm[.134–.146IN].
△5 APPLY TORQ–SEAL IN ALLEN SOCKET TO FILL HOLE AFTER FLAT HD HAS BEEN ADJUSTED TO CORRECT HEIGHT AT QUALIFICATION. APPLY #1–23419–5 LOC–TITE TO THREADS.
△6 CUT TO LENGTH AT ASSY.

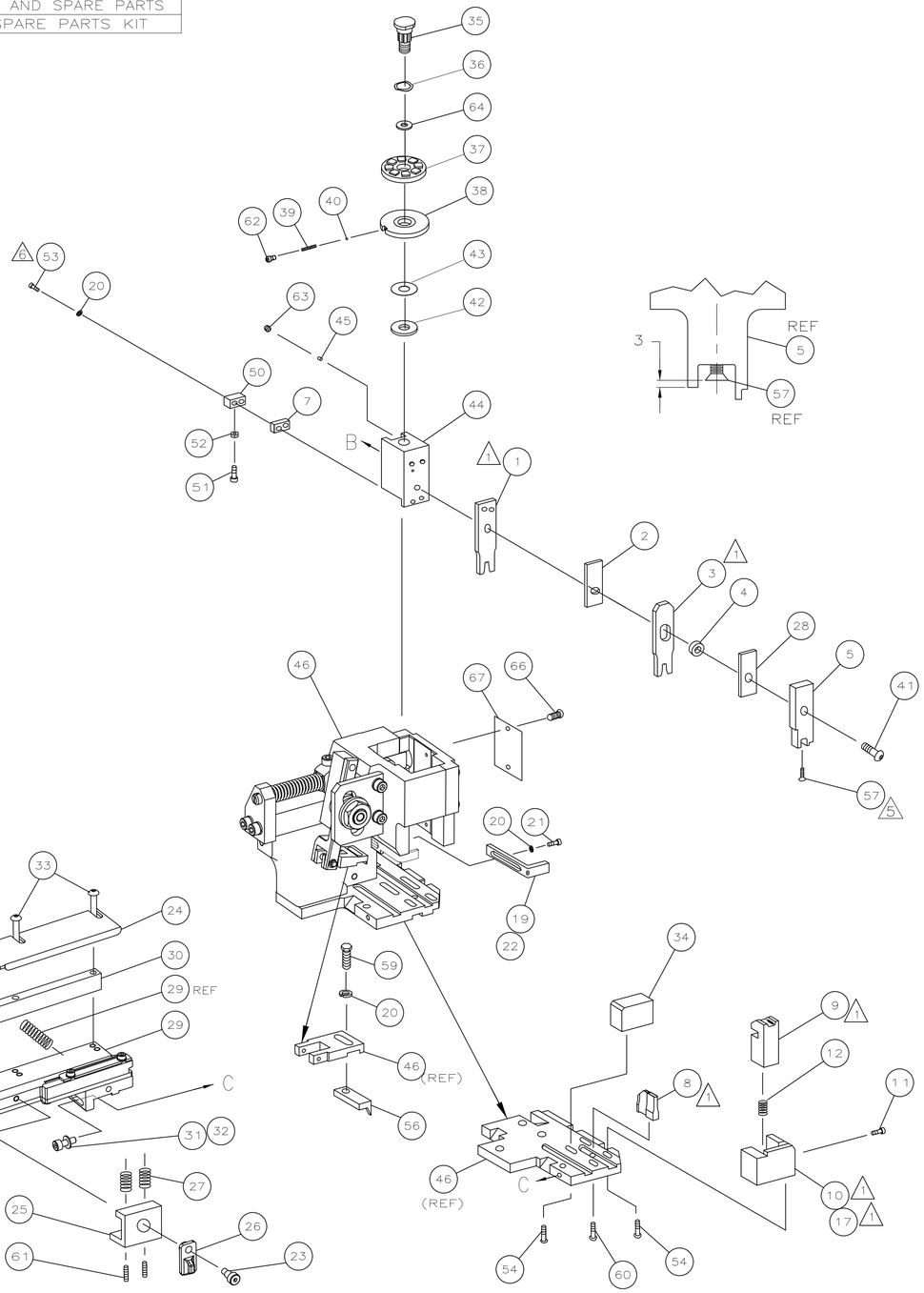

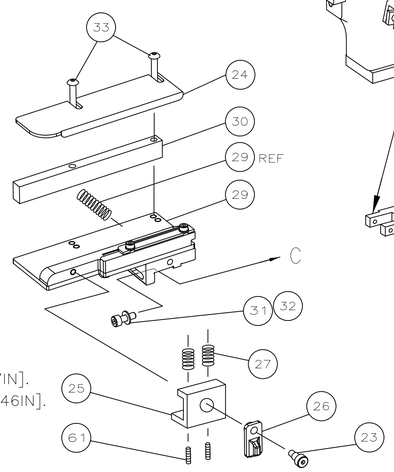

VIEW B ROTATED 180°

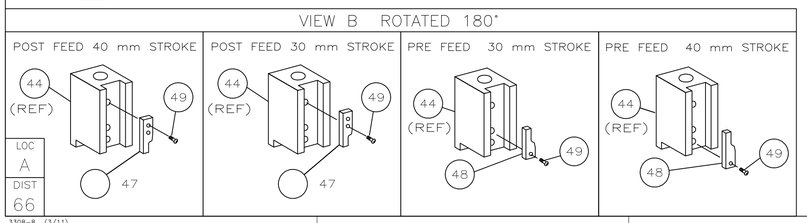

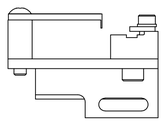

LONG POSITION
GUIDE OFF WIRE BARREL

									73
–	1	1	1	1	1	1	1426465	PRINT, APPLICATOR LOG SHEET	72
–	1	1	1	1	1	1	1338705–1	DOCUMENTATION PACKAGE	71
									70
									69
									68
–	1	1	1	1	1	1	461264–1	PLATE, IDENTIFICATION	67
–	2	2	2	2	2	2	21017–2	SCR,DRIVE(#2x.19)ID PLATE	66
									65
–	1	1	1	1	1	1	986950–1	WASHER, FLAT PRECISION	64
–	1	1	1	1	1	1	3–18031–0	SCR,SKT SET(M6X6)RAM	63
–	1	1	1	1	1	1	18023–9	SCR,SHC(M4X6)INS DISC	62
–	2	2	2	2	2	2	2–18032–5	SCR,SET(M5X20)DRAG	61
–	1	1	1	1	1	1	18024–7	SCR,BHC(M4X10)ANVIL	60
–	1	1	1	1	1	1	5–18022–2	SCR,HEX(M4X8)FEED FINGER	59
									58
–	1	1	1	1	1	1	985575–3	SCR,FHC(M3X10)DEP	57
–	1	1	1	1	1	1	1338685–1	PAWL, FEED	56
									55
–	4	4	4	4	4	4	18024–8	SCR,BHC(M4x12)SHEAR HOLDER	54
△6 –	2	2	2	2	2	2	9–18023–6	SCR,SHC(M4x14)TERM HLD DWN	53
–	1	1	1	1	1	1	18030–1	NUT,HEX(M3)HOLD DOWN	52
–	1	1	1	1	1	1	811242–6	BUMPER, HOLDDOWN	51
–	1	1	1	1	1	1	690753–2	SPACER, TONKER	50
–	1	1	1	1	1	1	18024–3	SCR,BHC(M3X10)CAM	49
–	–	1	–	–	1	–	1338675–1	CAM, PRE FEED 30 & 40 mm ST	48
–	1	–	1	1	–	1	1338676–1	CAM, POST FEED 30 & 40 mm ST	47
–	1	1	1	1	1	1	1320999–3	APPLICATOR BASIC SUBASSY	46
–	1	1	1	1	1	1	690191–1	PLUG, NYLON	45
–	1	1	1	1	1	1	1338660–1	RAM	44
–	1	1	1	1	1	1	690125–1	WASHER, LAMINATED	43
–	1	1	1	1	1	1	690124–1	WASHER, RAM	42
–	1	1	1	1	1	1	992285–2	SCR,SHC(M8X25)RAM LOW HD	41
–	1	1	1	1	1	1	23241–1	BALL, STEEL	40
–	1	1	1	1	1	1	2–22278–7	SPRING, COMPRESSION	39
–	1	1	1	1	1	1	1320922–1	DISC, INSULATION	38
–	1	1	1	1	1	1	354777–1	WIRE DISC, PLASTIC	37
–	1	1	1	1	1	1	22480–5	WASHER, SPRING	36
–	1	1	1	1	1	1	690212–1	POST, RAM	35
–	1	1	1	1	1	1	2–1320934–4	SUPPORT, TERMINAL	34
–	2	2	2	2	2	2	1–18024–0	SCR,BHC(M4X20)STRIP GUIDE	33
–	1	1	1	1	1	1	18027–2	WASHER, FLAT(M4)	32
–	1	1	1	1	1	1	1–18023–2	SCR,SKT CAP(M4X12)MOUNT BLOCK	31
–	1	1	1	1	1	1	1–1320908–0	SPACER, STRIP GUIDE	30
–	1	1	1	1	1	1	1633073–2	STRIP GUIDE PLATE ASSY	29
–	1	1	1	1	1	1	1–455888–5	SPACER, FRONT SHEAR DEP	28
–	2	2	2	2	2	2	1–22284–0	SPRING, DRAG	27
–	1	1	1	1	1	1	356835–1	LEVER, DRAG RELEASE	26
–	1	1	1	1	1	1	240792–1	DRAG, TERMINAL	25
–	1	1	1	1	1	1	1320928–1	PLATE, STRIP GUIDE	24
–	1	1	1	1	1	1	980371–4	SCR,SHC SHLD	23
–	1	–	1	1	–	1	690472–2	STRIPPER	22
–	1	1	1	1	1	1	1–18023–1	SCR,SHC(M4X10)STRIPPER	21
–	4	4	4	4	4	4	18025–2	WASHER,LOCK(M4)STRIPPER	20
–	–	1	–	–	1	–	690472–1	STRIPPER	19
									18
△1 –	1	–	–	1	–	–	1338684–2	HOLDER, SHEAR, FRONT (NO–CUT)	17
									16
									15
									14
									13
–	1	1	1	1	1	1	3–22280–3	SPRING, SHEAR	12
–	1	1	1	1	1	1	356885–5	STOP, SHEAR	11
–	–	1	1	–	1	1	1–1320921–0	HOLDER, SHEAR, FRONT (CUT)	10
△1 –	1	1	1	1	1	1	318707–1	SHEAR, FLOAT (FRONT)	9
1	2	2	2	1	1	1	1333229–8	ANVIL	8
–	1	1	1	1	1	1	1–240641–7	SPACER, DEPRESSOR (REAR)	7
									6
–	1	1	1	1	1	1	1338680–6	DEPRESSOR, SHEAR (FRONT)	5
–	1	1	1	1	1	1	238011–2	SPACER, BLOCK CRIMPER	4
△1 1	2	2	2	1	1	1	1–1583690–2	CRIMPER, INSULATION	3
–	1	1	1	1	1	1	455888–4	SPACER, CRIMPER	2
△1 1	2	2	2	1	1	1	1–456410–7	CRIMPER, WIRE	1
	–77	–76	–72	–71	–6	–2	–1	PART NO / DESCRIPTION	ITEM NO

QTY REQD PER ASSY — PARTS LIST

P	LTR	REVISION RECORD	DATE	DWN	APVD
	B	ECR–11–011180	5–2011	MY	GB

DIMENSIONS: INCHES
TOLERANCES UNLESS OTHERWISE SPECIFIED: 0 PLC ± – ; 1 PLC ± – ; 2 PLC ± – ; 3 PLC ± – ; 4 PLC ± –
ANGLES ± –
SURFACE TEXTURE √

DWN 11NOV03 L.LOFTHOUSE
CHK – –
APVD 11NOV03 F.BACKHURST
MATERIAL – –
HEAT TREAT – –
TE Connectivity
NAME SIDE FEED HD–I APPLICATOR
SCALE – SIZE A1 DRAWING NO 1426465 SHEET 1 OF 1 REV B

CUSTOMER ACCESSIBLE PRODUCTION DRAWING

THIS DRAWING IS A CONTROLLED DOCUMENT.
DWG NO 1426465
THIS INFORMATION IS CONFIDENTIAL AND PROPRIETARY TO TYCO ELECTRONICS CORPORATION AND ITS WORLDWIDE SUBSIDIARIES AND AFFILIATES. IT MAY BE USED BY RECIPIENT ONLY FOR THE PURPOSE FOR WHICH IT IS TRANSMITTED BY TYCO ELECTRONICS CORPORATION OR ANY OF ITS SUBSIDIARIES OR AFFILIATES, AND MAY NOT BE REPRODUCED OR DISCLOSED TO ANYONE OTHER THAN TE PERSONNEL, WITHOUT AUTHORIZATION FROM TE (www.te.com).
3308–8 (3/11)