MODEL NO.	PACKAGING
148-0701-802	ONE PCS PER BAG

REV	ECO	DATE
001	ECO-19-0037	08/28/2019

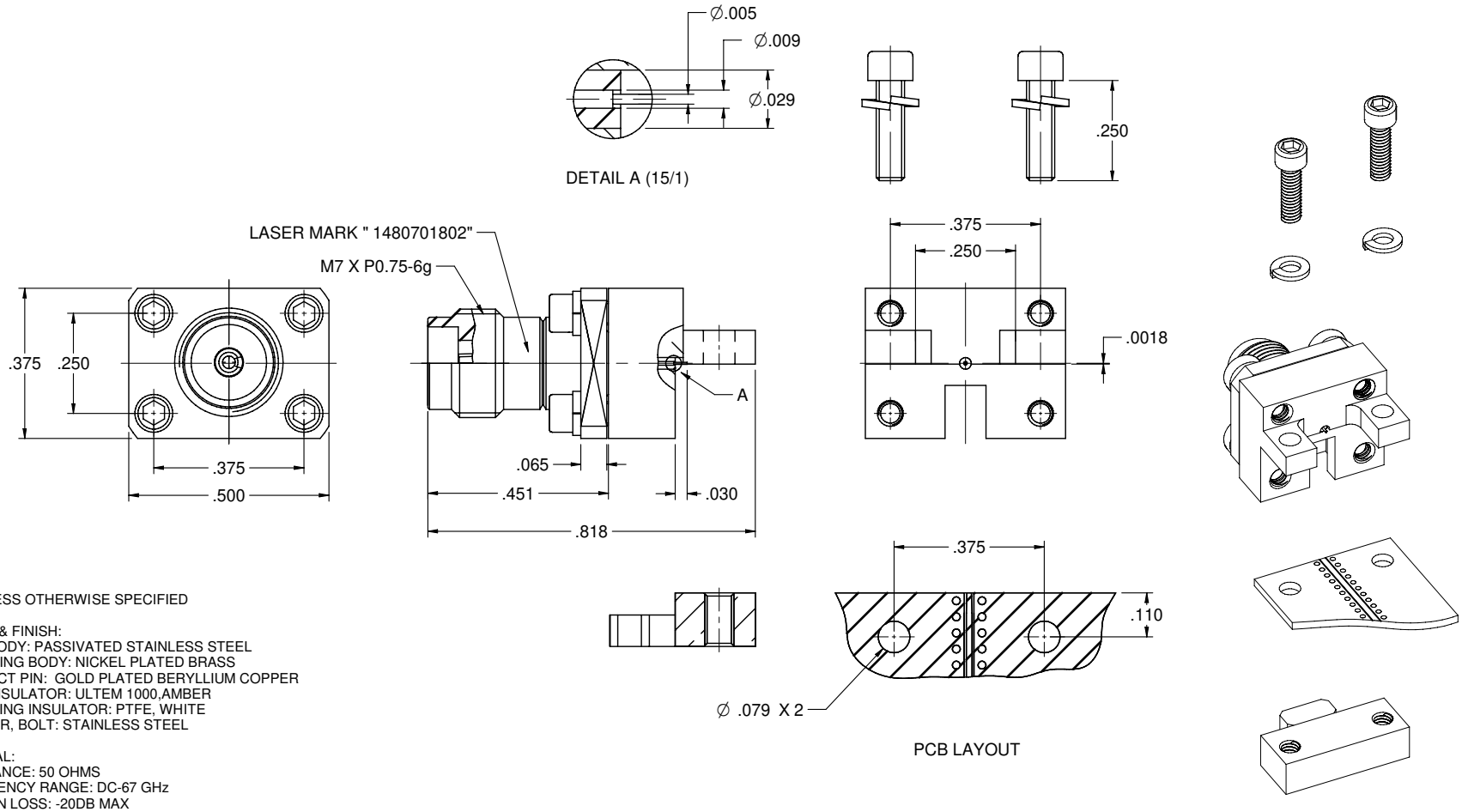

NOTES: UNLESS OTHERWISE SPECIFIED

1. MATERIAL & FINISH:
   1.1 MAIN BODY: PASSIVATED STAINLESS STEEL
   1.2 MOUNTING BODY: NICKEL PLATED BRASS
   1.3 CONTACT PIN: GOLD PLATED BERYLLIUM COPPER
   1.4 MAIN INSULATOR: ULTEM 1000,AMBER
   1.5 MOUNTING INSULATOR: PTFE, WHITE
   1.6 WASHER, BOLT: STAINLESS STEEL

2. ELECTRICAL:
   2.1 IMPEDANCE: 50 OHMS
   2.2 FREQUENCY RANGE: DC-67 GHz
   2.3 RETURN LOSS: -20DB MAX
   2.4 DIELECTRIC WITHSTANDING VOLTAGE: 500 VRMS MIN
   2.5 CONTACT RESISTANCE:
      2.5.1 CENTER CONTACT: 4 MILLIOHMS MAX
      2.5.2 OUTER CONTACT: 2.5 MILLIOHMS MAX

3. MECHANICAL:
   3.1 DURABILITY: 500CYCLES MIN

4. ENVIRONMENT:
   4.1 OPERATING TEMPERATURE: -55 TO 125°C
   4.2 THERMAL SHOCK: MIL-STD-202, METHOD 107, CONDITION B.
   4.3 SHOCK: MIL-STD-202, METHOD 213, CONDITION I
   4.4 VIBRATION: MIL-STD-202, METHOD 204, CONDITION D
   4.5 MOISTURE RESISTANCE: MIL-STD-202, METHOD 106
   4.6 SALT SPRAY: MIL-STD-202, METHOD 101, CONDITION B

cinch connectivity solutions

This PROPRIETARY Document is property of Cinch Connectivity Solutions. Unauthorized reproduction, non-transmittable, and disclosure of this document or any part thereof without the express written consent of Cinch Connectivity Solutions is prohibited.

INTERPRET DRAWING IN ACCORDANCE WITH ASME Y14.5-2009

Model No. 148-0701-801/810

RoHS2 ☑ 2011/65/EU

Unless otherwise specified dimensions are in inches

.XXX ±.02
.XXXX ±.01
ANGLES ±5°

Cage Code

3RD ANGLE PROJECTION

Drawn By: Betty.Yu

Date: 08/28/2019

Johnson

Title: END LAUNCH JACK SCREW-ON TYPE LOW PROFILE 1.85mm. 0.005" PIN

Drawing No. 148-0701-801/810

Rev. 001

Size C

DO NOT SCALE DRAWING

Workmanship Std: NONE

Sheet 1 of 1