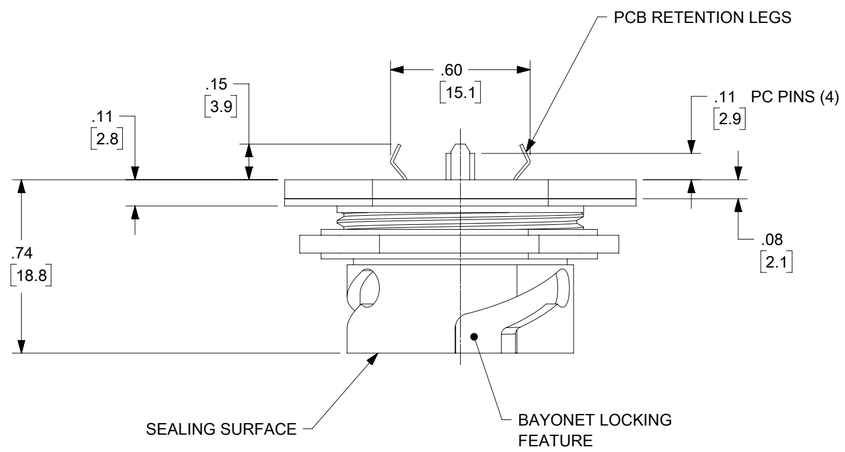

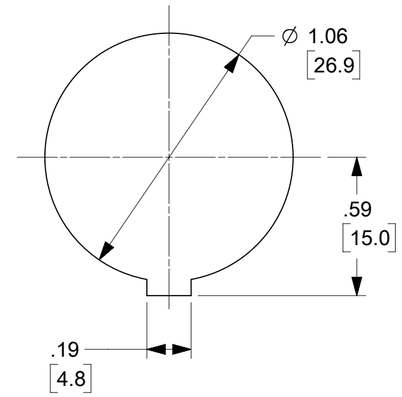

REF. PANEL CUTOUT

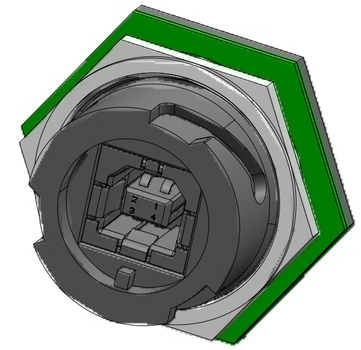

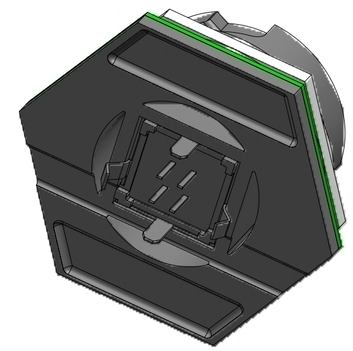

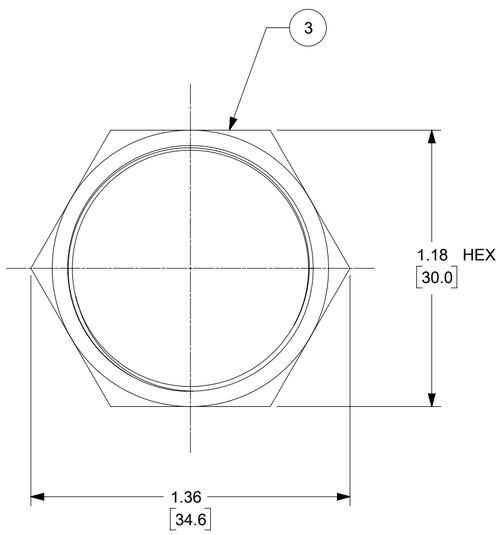

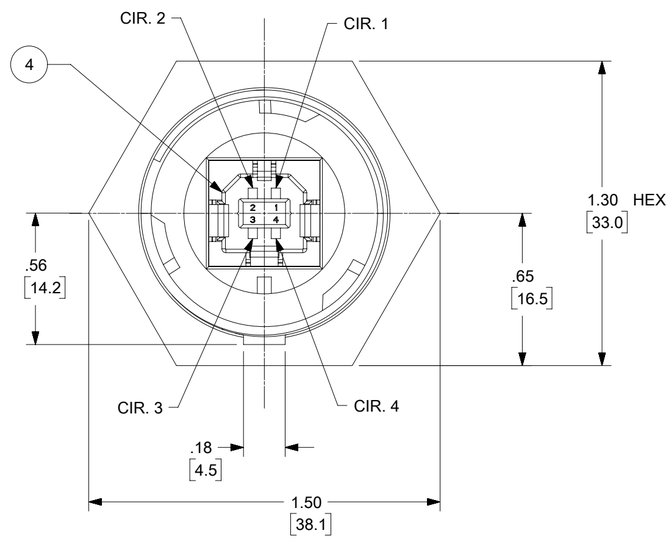

FACE VIEW SHOWN
WITHOUT LOCKNUT
OR GASKET SEAL

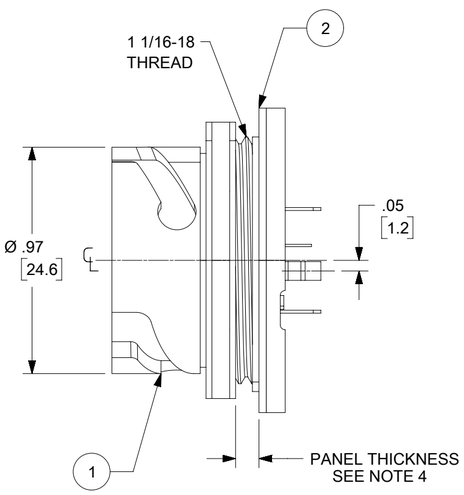

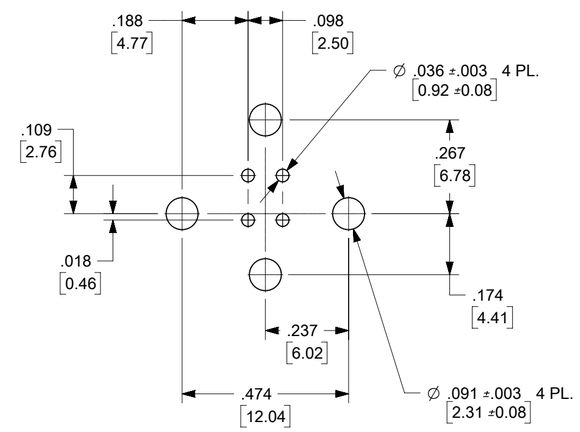

REF. PCB MOUNTING DIMS

NOTES:
1. MATERIALS: SEE TABLE
2. FINISHES: SEE TABLE
3. ELECTRICAL SPECS:
   VOLTAGE: 30V
   CURRENT: 1.0A
4. MAX PANEL THICKESS: .10
5. PANEL NUT TORQUE: 24 ±4 IN. LBS
6. DIMS SHOWN ARE FOR REFERENCE
   UNLESS NOTED OTHERWISE
7. PRODUCT SPEC: PS-84727-002

TABLE

ITEM	DESCRIPTION	MATERIAL	FINISH
4	USB-B RECEPTACLE	SHELL & CONT: PHOS-BRNZ	GOLD PLTD. CONTACTS
3	LOCKNUT	NYLON	BLACK
2	GASKET SEAL	NEOPRENE	BLACK
1	USB RECEPTACLE, PANEL MOUNT	PBT	BLACK

QUALITY SYMBOLS
FA = 0
FC = 0
FD = 0
= 0
C = 0
= 0
= 0
C = 0

THIS DRAWING CONTAINS INFORMATION THAT IS PROPRIETARY TO MOLEX ELECTRONIC TECHNOLOGIES, LLC AND SHOULD NOT BE USED WITHOUT WRITTEN PERMISSION

MIGRATE TO NX 2017/06/08
EC NO: 114072 2017/07/19
DRWN: RSTONE
CHK'D: BRUPERT 2017/09/06
APPR: BWOODMAN
REV A1

GENERAL TOLERANCES (UNLESS SPECIFIED)

	MM	INCH
4 PLACES	±	±
3 PLACES	±	±
2 PLACES	±	±
1 PLACES	±	±
0 PLACES	±	±

ANGULAR TOL ± 2.0

DRAFT WHERE APPLICABLE MUST REMAIN WITHIN DIMENSIONS

DIMENSION UNITS: INCH
SCALE: 1:1
DRWN BY: R. STONE DATE: 2010/08/09
CHK'D BY: K. JOZWIK DATE: 2010/08/12
APPR BY: JFMURPHY DATE: 2010/09/16
DRAWING SIZE: C
THIRD ANGLE PROJECTION

molex®

RECEPTACLE, PANEL, PCB MOUNT
USB TYPE B, SHIELDED

PRODUCT CUSTOMER DRAWING

SERIES	MATERIAL NUMBER	CUSTOMER
84730	847300010	GENERAL MARKET

DOCUMENT NUMBER	DOC TYPE	DOC PART	SHEET NUMBER
SD-84730-010	PSD	001	1 OF 1

RELEASE STATUS: P1 RELEASE DATE: 06.09.2017 16:36:25

FORMAT: Eng-tega-master-B-prod-C
REVISION: C
DATE: 2017/02/06