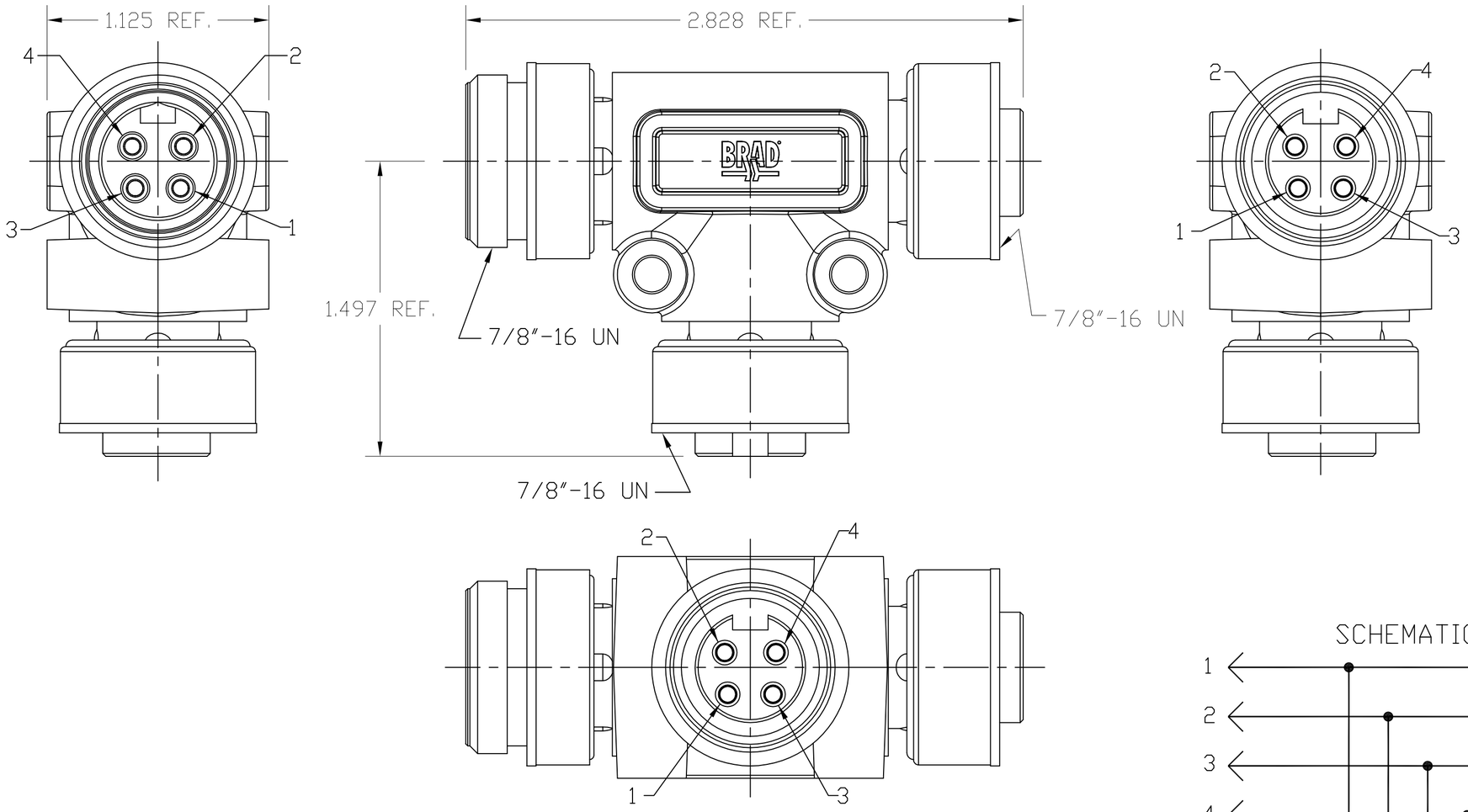

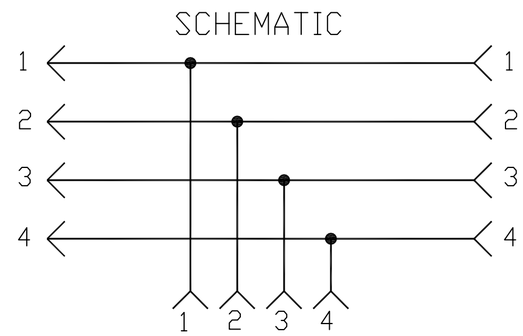

NOTES:

MATERIALS:

MOLDED BODY:	BLACK PVC
COUPLERS:	STAINLESS STEEL OR NI PLATED BRASS
CONTACTS:	GOLD/NICKEL OVER COPPER ALLOY
MC INSERTS:	BLACK PVC
FRICTION RINGS(MC FEM.):	NYLON

ELECTRICAL:

CURRENT RATING:	7AMP MAX
VOLTAGE RATING:	300V

MECHANICAL:

TEMPERATURE RANGE:	-20° TO 60°C
INGRESS PROTECTION:	IP 67

AGENCY CERTIFICATIONS:

AGENCY:	CSA PENDING

PART NUMBER REFERENCE:

MATERIAL NUMBER	ENGINEERING NUMBER	COUPLER STYLE	GAUGE
1300450002	T140140-001FF8	HEX - 316 STAINLESS STEEL	18AWG
1300450001	T140140-001FF	KNURLED - NI PLATED BRASS	18AWG

UPDATE PER JM
EC NO: WNA2009-0313
DRWN: LHARTMAN 2008/10/27
CH'KD: VOU 2008/11/07
APPR: JFMURPHY 2008/11/10
DESCRIPTION
REV C

QUALITY SYMBOL
▼=0
(C)=0

GENERAL TOLERANCES (UNLESS SPECIFIED)

	mm	INCH
4 PLACES	±----	±----
3 PLACES	±----	±----
2 PLACES	±----	±----
1 PLACE	±----	±----
ANGULAR ±1/2°		

DRAFT WHERE APPLICABLE MUST REMAIN WITHIN DIMENSIONS

DIMENSION STYLE: ----
SCALE: 2:1
DESIGN UNITS: INCH
THIRD ANGLE PROJECTION

DRAWN BY: LHARTMAN DATE: 2008/10/27
CHECKED BY: VOU DATE: 2008/10/27
APPROVED BY: JFMURPHY DATE: 2008/10/27

TITLE: MINI-CHANGE TEE
4 POLE MA/FE W/FE DROP
---

molex MOLEX INCORPORATED

MATERIAL NO.: SEE TABLE
DOCUMENT NO.: SD-130045-001
SHEET NO.: 1 0F 1
SIZE: C

THIS DRAWING CONTAINS INFORMATION THAT IS PROPRIETARY TO MOLEX INCORPORATED AND SHOULD NOT BE USED WITHOUT WRITTEN PERMISSION