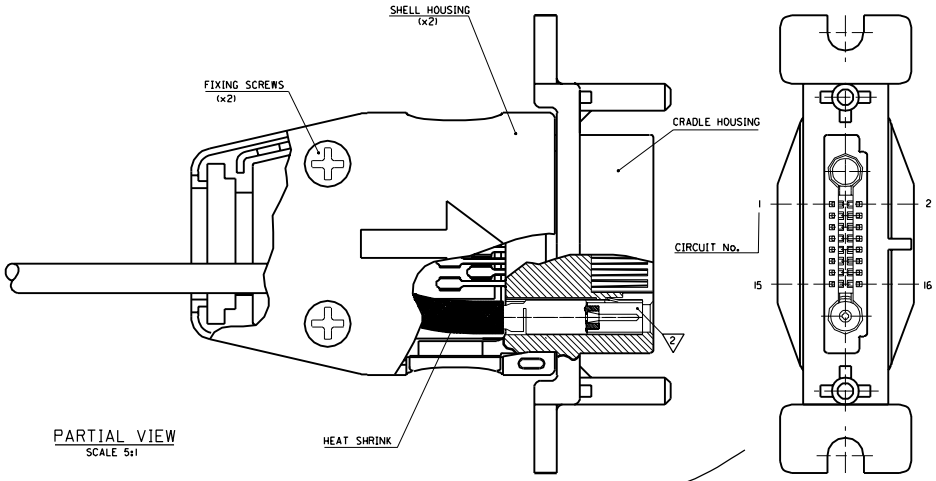

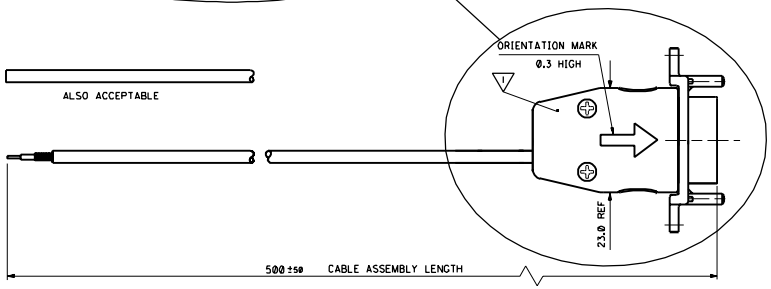

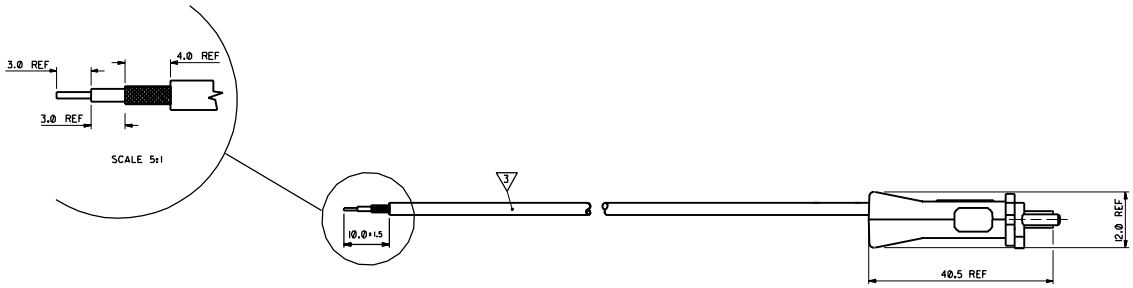

BILL OF MATERIALS

NO.	QUANTITY	SUPPLIER	DESCRIPTION	PART No.	SEE NOTE
1	1	MOLEX	16 CIRCUIT I/O MOBILE PHONE CRADLE CONNECTOR	90812-0001	1, 2
2	1	MOLEX	COAXIAL RF CONNECTOR	90853-0001	3
3	1	NO PREFERRED SUPPLIERS	COAXIAL CABLE 50 OHM	RG 316 U	3

NOTES:-

1. MATES WITH 90811 SERIES HANDSET CONNECTOR
2. SEE PRODUCT SPECIFICATION No. PS-99020-0033
3. ONLY AVAILABLE FROM MOLEX AS PART OF A CABLE ASSEMBLY.
4. PACKAGING : SEE PACKING SPECIFICATION ES-99039-0002 (OPTION 1.2), AND LABELLED AS SHOWN . YEAR AND MONTH, 'XX', TO BE PRINTED ACCORDING TO IEC 62 INDEX 5.1 .
5. ASSEMBLIES TESTED FOR SHORTS AND CONTINUITY BETWEEN ALL CIRCUITS

WIRING DIAGRAM : RF CABLE

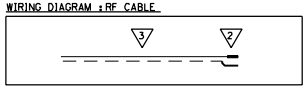

XX	MXI
MOLEX 90812-1006	

FOR PREVIOUS DRAWING ISSUES SEE MRI.

LTR	REVISIONS
A1	ADDITION OF ARROW ECN E68272 95.1.16 MK

DIMENSIONS SHOWN (METRIC) INCH
UNLESS OTHERWISE SPECIFIED TOLERANCES ANGULAR ± 1°

	INCH	(METRIC)
3 PLACE	±	±
2 PLACE	±	±
1 PLACE		±

DRAFT WHERE APPLICABLE MUST REMAIN WITHIN DIMENSIONS

DESIGN DIMENSION ☒ (MM) ☐ IN.
(PRIMARY)
EQUIVALENT DIMENSION ☐ (MM) ☐ IN.
(SECONDARY)

DRWD BY MC
CHK'D BY
APP'D BY
SCALE 2:1

REVISE ONLY ON CAD SYSTEM | SH. | REV.

CADCAM FILENAME 3MM4148 DGN

THIS DRAWING CONTAINS INFORMATION THAT IS PROPRIETARY TO MOLEX INC & SHOULD NOT BE USED WITHOUT WRITTEN PERMISSION

TITLE

TEST HARNESS

MOLEX EUROPE

SHEET NO. 1OF 1 | DATE 95/02/24

PART NO. 90812-1006 | DWG NO. SDA-90812-1006 | SIZE D

S453-1001