THIS DRAWING IS UNPUBLISHED. RELEASED FOR PUBLICATION -.- .
© COPYRIGHT - By - ALL RIGHTS RESERVED.

LOC	DIST
CM	00

REVISIONS

P	LTR	DESCRIPTION	DATE	DWN	APVD
	Z1	REVISED PER ECR-15-006687	21OCT2015	NK	NL

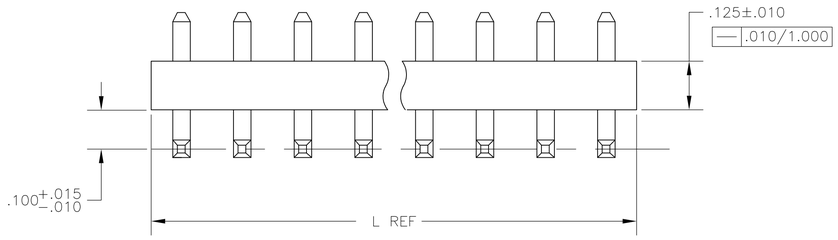

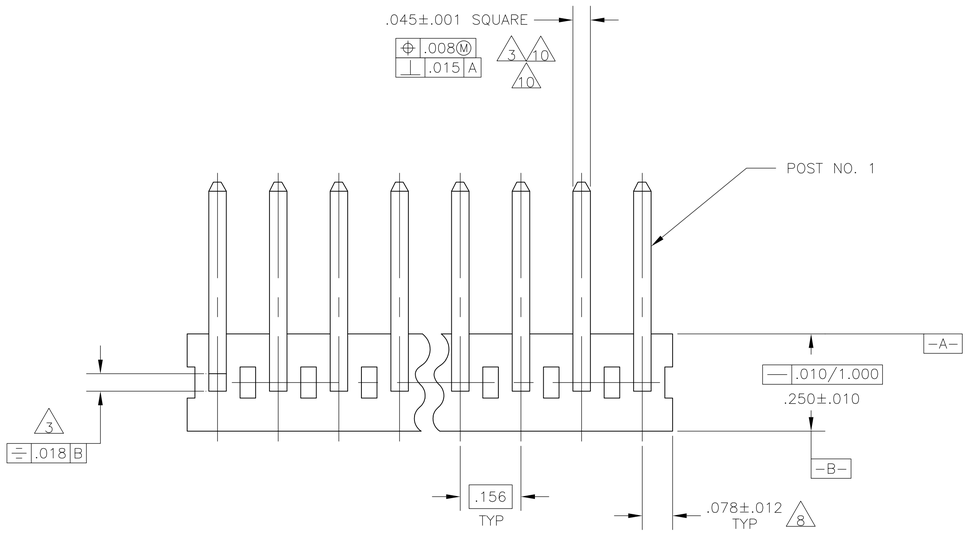

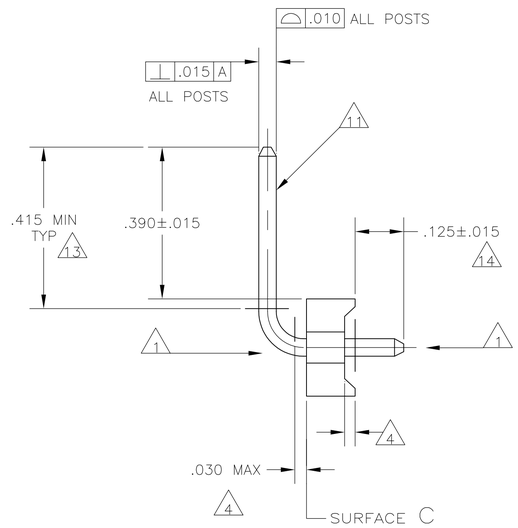

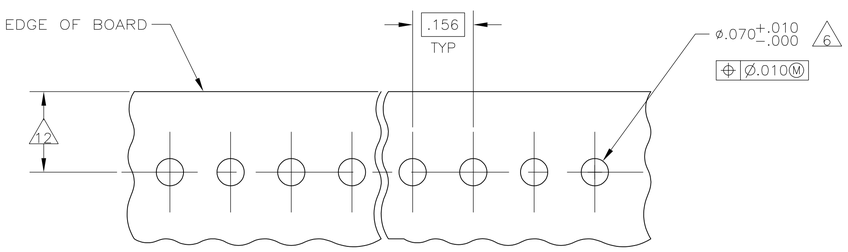

RECOMMENDED MOUNTING HOLE PATTERN
FOR .063 THICK P.C. BOARD 2

1. POST TO WITHSTAND 13 NEWTONS (3LBS.) MIN. AXIAL FORCE IN BOTH DIRECTIONS SHOWN WITHOUT DISLODGING.
2. TOLERANCES APPLY TO SOLDER SIDE OF BOARD.
3. MEASURED AT SURFACE -C-
4. PLASTIC FLASH PERMITTED IN THIS AREA.
5. PARTS COMPLY WITH AMP SOLDERABILITY SPEC. NO. 109-11-2.
6. ONE HOLE MAY BE UNDERSIZED (.065/.060 DIA.) FOR ASSEMBLY RETENTION DURING WAVE SOLDERING.
7. MATERIAL: HEADER-THERMOPLASTIC POLYESTER NON-FILLED 94V-O(NATURAL)
   POST-COPPER ALLOY (SEE NOTES 13 & 14 FOR PLATING)
8. COORDINATE DIMENSION APPLIES FROM CENTER OF ACTUAL FEATURE.
9. PLASTIC BURRS CAUSED BY CUT-OFF TOOLING ARE PERMITTED WITHIN THE MAXIMUM TOLERANCE ENVELOPE.
10. POST TO BE MEASURED WHEN STRIP IS HELD FLAT.
11. POST MUST WITHSTAND TWO 90° BENDS AGAINST EXTRUSION WITHOUT BREAKING.
12. DIMENSION SHOULD BE .140 -.430 WHEN MATING WITH A MTA 156 CONNECTOR ASSEMBLY,.140 MIN WHEN MATING WITH A SL 156 WIRE-TO-BOARD CONNECTOR ASSEMBLY OR .140-.475 WHEN MATING WITH A SL 156 BOARD-TO-BOARD CONNECTOR ASSEMBLY.
13. PLATING: GOLD PLATE AREA, .000030 GOLD OR .000003 MIN GOLD FLASH OVER .000027 PALLADIUM NICKEL, PER TE CONNECTIVITY'S DISCRETION, ALL SIDES, OVER NICKEL UNDERPLATE, .000050 MIN, ALL SIDES AND ENTIRE LENGTH OF POST.
14. BRIGHT TIN/LEAD (93/7) PLATE AREA, .000150-.000350 THICK,ALL FOUR SIDES, .175 MIN.FOR -2 THRU -24.MATTE TIN PLATE AREA .000150-.000350"THICK ALL FOUR SIDES,.175"MIN MIN FOR -32 THRU -54
15. OBSOLETE PARTS: OBSOLETE CIS STREAMLINING PER D.RENAUD/D.SINISI

FINISH	L IN	L MM	NUMBER OF POSITIONS	PART NUMBER
TIN	3.744	95.10	24	5-641204-4
TIN	3.588	91.14	23	5-641204-3
TIN	3.432	87.17	22	5-641204-2
TIN	3.276	83.21	21	5-641204-1
TIN	3.120	79.25	20	5-641204-0
TIN	2.964	75.29	19	4-641204-9
TIN	2.808	71.32	18	4-641204-8
TIN	2.652	67.36	17	4-641204-7
TIN	2.496	63.40	16	4-641204-6
TIN	2.340	59.44	15	4-641204-5
TIN	2.184	55.47	14	4-641204-4
TIN	2.028	51.51	13	4-641204-3
TIN	1.872	47.55	12	4-641204-2
TIN	1.716	43.59	11	4-641204-1
TIN	1.560	39.62	10	4-641204-0
TIN	1.404	35.66	9	3-641204-9
TIN	1.248	31.70	8	3-641204-8
TIN	1.092	27.74	7	3-641204-7
TIN	.936	23.77	6	3-641204-6
TIN	.780	19.81	5	3-641204-5
TIN	.624	15.85	4	3-641204-4
TIN	.468	11.89	3	3-641204-3
TIN	.312	7.92	2	3-641204-2

FINISH	L IN	L MM	NUMBER OF POSITIONS	PART NUMBER
15 SUPERCEDED BY 5-641204-4	TIN-LEAD	3.744	95.10	24	~~2-641204-4~~
15 SUPERCEDED BY 5-641204-3	TIN-LEAD	3.588	91.14	23	~~2-641204-3~~
15 SUPERCEDED BY 5-641204-2	TIN-LEAD	3.432	87.17	22	~~2-641204-2~~
15 SUPERCEDED BY 5-641204-1	TIN-LEAD	3.276	83.21	21	~~2-641204-1~~
15 SUPERCEDED BY 5-641204-0	TIN-LEAD	3.120	79.25	20	~~2-641204-0~~
15 SUPERCEDED BY 4-641204-9	TIN-LEAD	2.964	75.29	19	~~1-641204-9~~
15 SUPERCEDED BY 4-641204-8	TIN-LEAD	2.808	71.32	18	~~1-641204-8~~
15 SUPERCEDED BY 4-641204-7	TIN-LEAD	2.652	67.36	17	~~1-641204-7~~
15 SUPERCEDED BY 4-641204-6	TIN-LEAD	2.496	63.40	16	~~1-641204-6~~
OBSOLETE	TIN-LEAD	2.340	59.44	15	~~1-641204-5~~
15 SUPERCEDED BY 4-641204-4	TIN-LEAD	2.184	55.47	14	~~1-641204-4~~
15 SUPERCEDED BY 4-641204-3	TIN-LEAD	2.028	51.51	13	~~1-641204-3~~
15 SUPERCEDED BY 4-641204-2	TIN-LEAD	1.872	47.55	12	~~1-641204-2~~
15 SUPERCEDED BY 4-641204-1	TIN-LEAD	1.716	43.59	11	~~1-641204-1~~
15 SUPERCEDED BY 4-641204-0	TIN-LEAD	1.560	39.62	10	~~1-641204-0~~
15 SUPERCEDED BY 3-641204-9	TIN-LEAD	1.404	35.66	9	~~641204-9~~
OBSOLETE	TIN-LEAD	1.248	31.70	8	~~641204-8~~
15 SUPERCEDED BY 3-641204-7	TIN-LEAD	1.092	27.74	7	~~641204-7~~
15 SUPERCEDED BY 3-641204-6	TIN-LEAD	.936	23.77	6	~~641204-6~~
15 SUPERCEDED BY 3-641204-5	TIN-LEAD	.780	19.81	5	~~641204-5~~
15 SUPERCEDED BY 3-641204-4	TIN-LEAD	.624	15.85	4	~~641204-4~~
15 SUPERCEDED BY 3-641204-3	TIN-LEAD	.468	11.89	3	~~641204-3~~
SUPERCEDED BY 3-641204-2	TIN-LEAD	.312	7.92	2	~~641204-2~~

IN	MM	IN	MM
.063	1.60	-	-
.060	1.52	-	-
.045	1.14	1.000	25.40
.030	0.76	.475	12.07
.018	0.46	.430	10.92
.015	0.38	.415	10.54
.012	0.30	.390	9.91
.010	0.25	.250	6.35
.008	0.20	.156	3.96
.005	0.13	.140	3.56
.001	0.03	.125	3.18
.000350	0.00889	.100	2.54
.000150	0.00381	.078	1.98
.000050	0.00127	.070	1.78
.000015	0.00038	.065	1.65

CONVERSION TABLE

THIS DRAWING IS A CONTROLLED DOCUMENT.

DIMENSIONS: INCHES

TOLERANCES UNLESS OTHERWISE SPECIFIED:
0 PLC ± -
1 PLC ± -
2 PLC ± -
3 PLC ± .005
4 PLC ± -
ANGLES ± -

MATERIAL 7 FINISH 7

DWN N.GANNON 08DEC92
CHK R.SWING 08DEC92
APVD R.SPEER 11JAN93

PRODUCT SPEC —
APPLICATION SPEC —
WEIGHT —

TE Connectivity

NAME MTA-156 HEADER ASSEMBLY,PLAIN, RIGHT ANGLE, .045 SQUARE POST, .000030 GOLD

SIZE A1 | CAGE CODE 00779 | DRAWING NO C-641204 | RESTRICTED TO —

CUSTOMER DRAWING | SCALE 5:1 | SHEET 1 OF 1 | REV Z1

4805 (3/11)