K4001A3B02

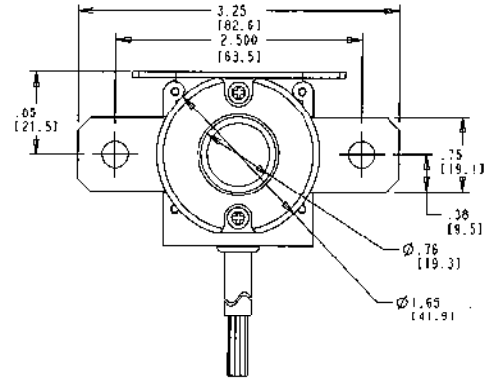

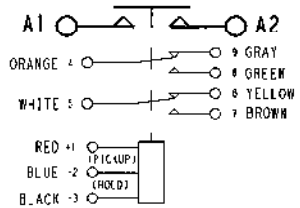

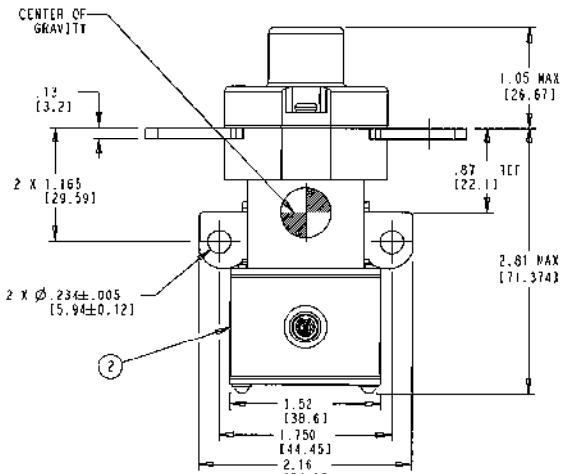

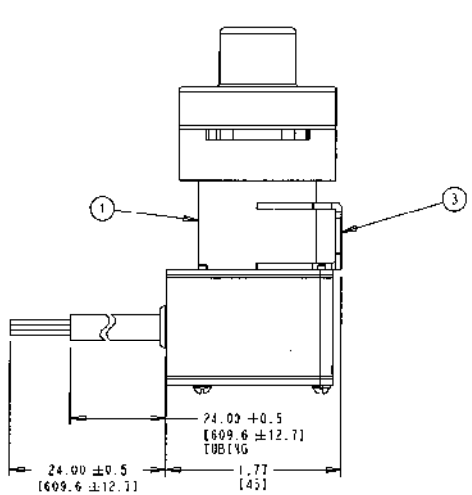

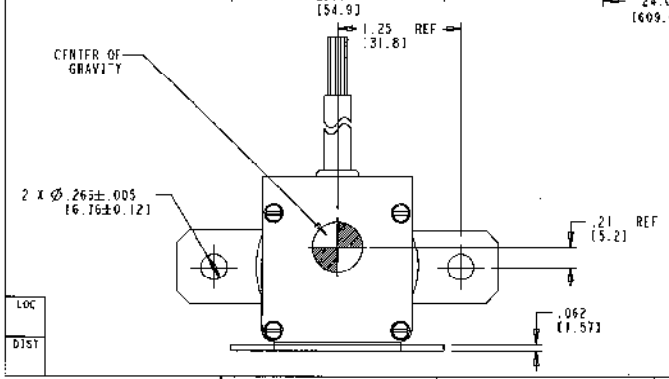

CONSTRUCTION	GASKET SEALED
MAIN CONTACTS	
CONFIGURATION	SPST N.O. (DOUBLE BREAK)
VOLTAGE	28 VDC
CURRENT	
RESISTIVE	400 AMPS
RUPTURE	4000 AMPS
MOTOR	1875 AMPS FOR 0 TO 5 SEC. 1700 AMPS FOR 5 TO 10 SEC. 1500 AMPS FOR 10 TO 15 SEC. 1200 AMPS FOR 15 TO 20 SEC. 1000 AMPS FOR 20 TO 25 SEC. 750 AMPS FOR 25 TO 30 SEC. 500 AMPS FOR 30 TO 90 SEC.
AUXILIARY CONTACTS	
CONFIGURATION	2PDT
VOLTAGE	28 VDC
CURRENT	
RESISTIVE	1 AMP
COIL DATA	
DUTY CYCLE	CONTINUOUS (NON-ECONOMIZED)
MAX OPERATE VOLTAGE	32 VDC
NOM OPERATE VOLTAGE	28 VDC
MAX PICKUP VOLTAGE	18 VDC MAX
DROPOUT VOLTAGE	9 VDC MAX
COIL CURRENT	
INRUSH	9 AMP MAX AT 28 VDC
HOLD	400 mA MAX AT 28 VDC
OPERATE TIME	45 mS AT 18 VDC AND 85°C
DROPOUT TIME	25 mS AT 32 VDC
ENVIRONMENTAL DATA	
TEMPERATURE	-55°C TO 85°C
ALTITUDE	50,000 FEET
LIFE ELECTRICAL	50,000 CYCLES MIN.
LIFE MECHANICAL	100,000 CYCLES MIN.
WEIGHT MAX	.75 LBS

NOTES:
1. AUXILIARY CONTACTS ARE GOLD PLATED.
2. LOW LEVEL RATING NOT APPLICABLE AFTER APPLICATION OF CURRENT GREATER THAN 125 mA.
3. PICKUP MUST BE LIMITED TO 100 mS MINIMUM TO 150 mS MAXIMUM ACROSS PINS 1 (RED) AND 2 (BLUE).

FIND NO	QTY. REQD	PART OR IDENTIFYING NO	NOMENCLATURE OR DESCRIPTION	DRAWING OR SPECIFICATION	FSCM NO	TE PART NO	MATERIAL OR NOTE
3	1	47619-180	PRIMARY ASSEMBLY			3-1616989-6	
2	1	44900 D23	SCHEMATIC DIAGRAM			4-1616989-0	
1	1	44899-044	NAME PLATE			4-1616989-1	

REV	LTR	REVISION RECORD	DATE	DRN	APVD
	A	INITIAL DRAWING	30MAY2012	RSS	RSS

CAGE CODE: 74063

DIMENSIONS: INCHES[mm]

TOLERANCES UNLESS OTHERWISE SPECIFIED:
0 PLC ±
1 PLC ±
2 PLC ±.03
3 PLC ±.015
4 PLC ±
ANGLES: 2°
SURFACE TEXTURE √

DWN	RSS	30MAY2012
CHK	DA	05JULY2012
APVD	RSS	05JULY2012

MATERIAL
HEAT TREAT

TE Connectivity

NAME CONTACTOR - SPST N.O. DB
40J AMP, 28 VDC

K4001A3B02

SCALE NONE | SIZE A2 | DRAWING NO 4-1616988-2 | SHEET 1 OF 1 | REV A

LOC
DIST

THIS DRAWING IS A CONTROLLED DOCUMENT

DWG NO 4-1616988-2

THIS INFORMATION IS CONFIDENTIAL AND PROPRIETARY TO TYCO ELECTRONICS CORPORATION AND ITS WORLDWIDE SUBSIDIARIES AND AFFILIATES (TEC). IT MAY NOT BE DISCLOSED TO ANYONE, OUTSIDE OF TEC, WITHOUT WRITTEN AUTHORIZATION FROM TEC. (rev. TE-001).

320T-3 (2/11)