CUSTOMER TERMINAL	RoHS	LEAD(Pb)-FREE
Sn100%	Yes	Yes

ELECTRICAL SPECIFICATIONS @ 25°C unless otherwise noted:

compliant RoHS WE-MIDCOM

INDUCTANCE:	350uH min., 100kHz, 100mV, 18mADC, J1-J2; J3-J6, J4-J5; J7-J8 Lp.
DIELECTRIC RATING:	1500Vrms or 2250VDC for 1 minute between P1-12 to J1-8.
TURNS RATIO/POLARITY:	Per schematic.
INSERTION LOSS:	-1.0dB max., 1MHz - 100MHz.
RETURN LOSS:	-18dB min., 1M - 30MHz. -16dB min., 30M - 45MHz. -14dB min., 45M - 60MHz. -12dB min., 60M - 80MHz. -10dB min., 80M - 100MHz.
CROSSTALK:	-30dB typ., 1MHz - 100MHz.
COMMON MODE REJECTION:	-35dB min., 1MHz - 100MHz. -25dB min., 100MHz - 500MHz.

OPERATING TEMPERATURE RANGE: 0°C to +70°C.

Designed to handle 600mADC and meet 802.3at.

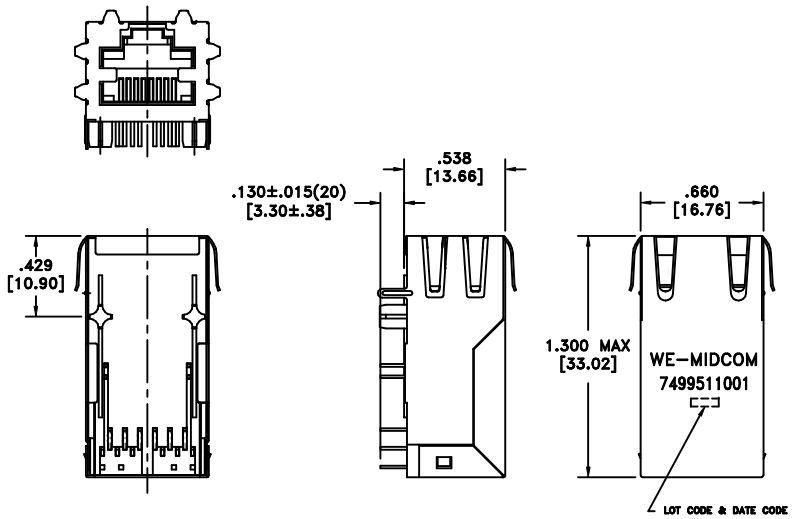

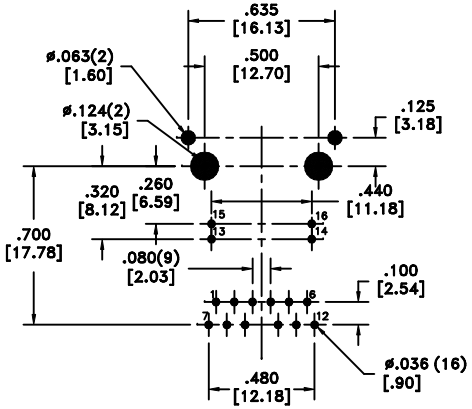

RECOMMENDED
P.C. PATTERN, COMPONENT SIDE

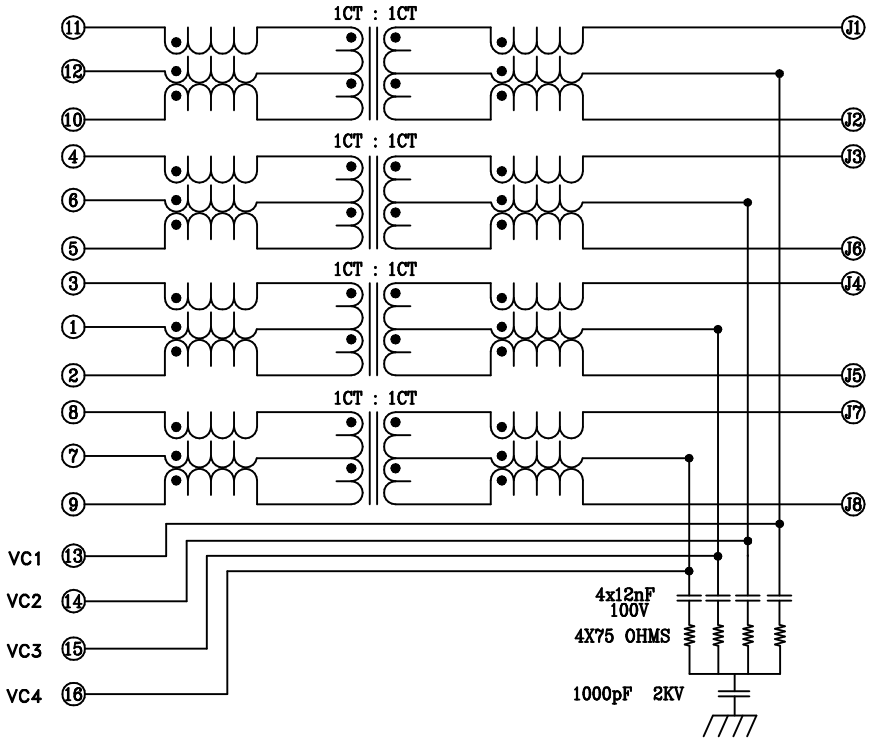

REV.	DATE
00	04/08

Packaging Specifications

Method: Tray
PKG-0573
www.midcom-inc.com

Unless otherwise specified:
Tolerances: Fractions: ±1/64
Angles: ±1° Decimals: ±.010[.25]

This drawing is dual dimensioned. Dimensions in brackets are in millimeters.

DRAWING TITLE
TRANSFORMER
Gigabit&POE+ high performance
eiSos p/n: 7499511001

Midcom-WE
www.midcom-inc.com

REVISIONS: SEE SHEET 1

DRAWING NO.
7499511001

SCALE ---

SHEET 2 OF 6