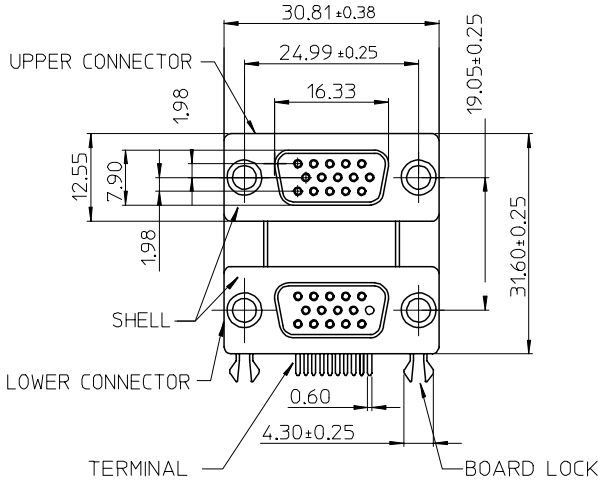

NOTE :

1.MATERIAL :

B HOUSING :HIGH TEMP THERMOPLASTIC,UL94-V0
COLOR:SEE TABLE.

TERMINAL :PHOSPHOR BRONZE

METAL SHELL :SPCC

BRACKET :SPCC

BOARD LOCK :BRASS

NUT :BRASS

2.PLATING :

TERMINAL :

CONTACT AREA :GOLD(Au) FLASH

SOLDER TAIL :TIN(Sn),THICKNESS=100 MICREINCH MIN/2.54 MICROMETER MIN.

UNDER PLATE :NICKEL(Ni)

B METAL SHELL :TIN (Sn),THICKNESS=80 MICREINCH MIN/2.03 MICROMETER MIN.
UNDER PLATE : COPPER(Cu).

B BRACKET :TIN (Sn),THICKNESS=50 MICREINCH MIN/1.27 MICROMETER MIN.

B NUT :TIN(Sn), THICKNESS=30 MICROINCH MIN. / 0.76 MICROMETER MIN.

3.RECOMMANDED PCB THICKNESS :1.60+/-0.05mm

4.PRODUCT SPECIFICATION : REFER TO PS-48145-001

5.TEST SUMMARY REFER TO TS-48145-001

B 6.LEAD FREE AND ROHS COMPLIANCE PRODUCT.

P/N	HOUSING COLOR
48145-0001	UPPER CONNECTOR-BLACK LOWER CONNECTOR-BLACK
48145-1000	UPPER CONNECTOR-BLACK LOWER CONNECTOR-PANTONE #661C :BLUE
B 48145-2000	UPPER CONNECTOR-PANTONE #661C :BLUE LOWER CONNECTOR-PANTONE #661C :BLUE

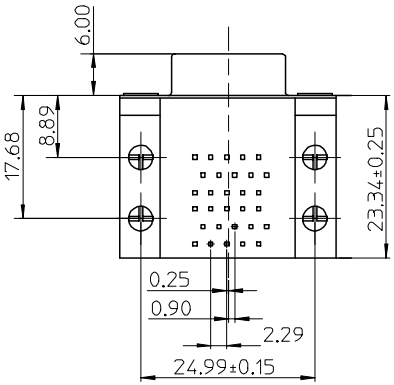

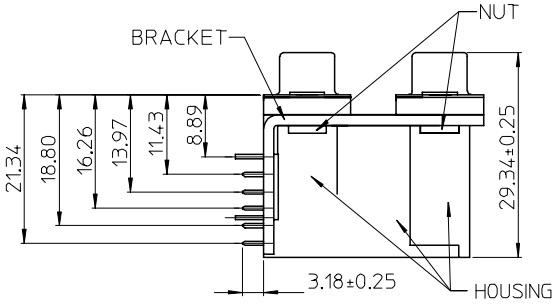

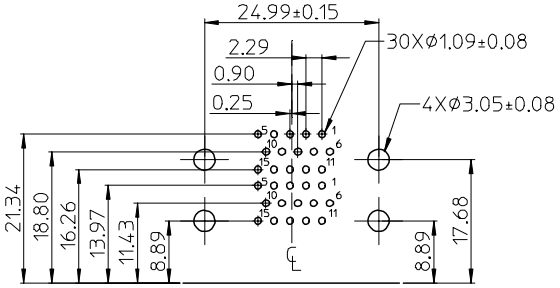

RECOMMENDED PCB LAYOUT

PDR-CM0059/EWR-2005-0117			
EC NO: SH2005-0335			
DRWN:ALLIN	2005/06/10		
CH'KD:	2005/06/17		
APPR:WWSCHANG	2005/06/17		
DESCRIPTION			
B	REV		

QUALITY SYMBOLS

▼=0

▽=0

GENERAL TOLERANCES (UNLESS SPECIFIED)

	mm	INCH
4 PLACES	± ---	± ---
3 PLACES	± ---	± ---
2 PLACES	± 0.25	± ---
1 PLACE	± 0.25	± ---
ANGULAR ± 3 °		

DRAFT WHERE APPLICABLE MUST REMAIN WITHIN DIMENSIONS

DIMENSION STYLE: MM ONLY

SCALE

DESIGN UNITS: METRIC

THIRD ANGLE PROJECTION

DRAWN BY: LINDA DATE

CHECKED BY: ALLEN DATE

APPROVED BY: WILSON DATE

MATERIAL NO.: SEE TABLE

TITLE: D SUBMINIATURE, RIGHT ANGLE STACK CONNECTOR (LEAD FREE VERSION)

molex MOLEX INCORPORATED

DOCUMENT NO.: SD-48145-001

SHEET NO.: 1 OF 1

SIZE: A4

THIS DRAWING CONTAINS INFORMATION THAT IS PROPRIETARY TO MOLEX INCORPORATED AND SHOULD NOT BE USED WITHOUT WRITTEN PERMISSION