DO NOT SCALE DIMENSIONS IN mm	METRIC	THIRD ANGLE PROJECTION

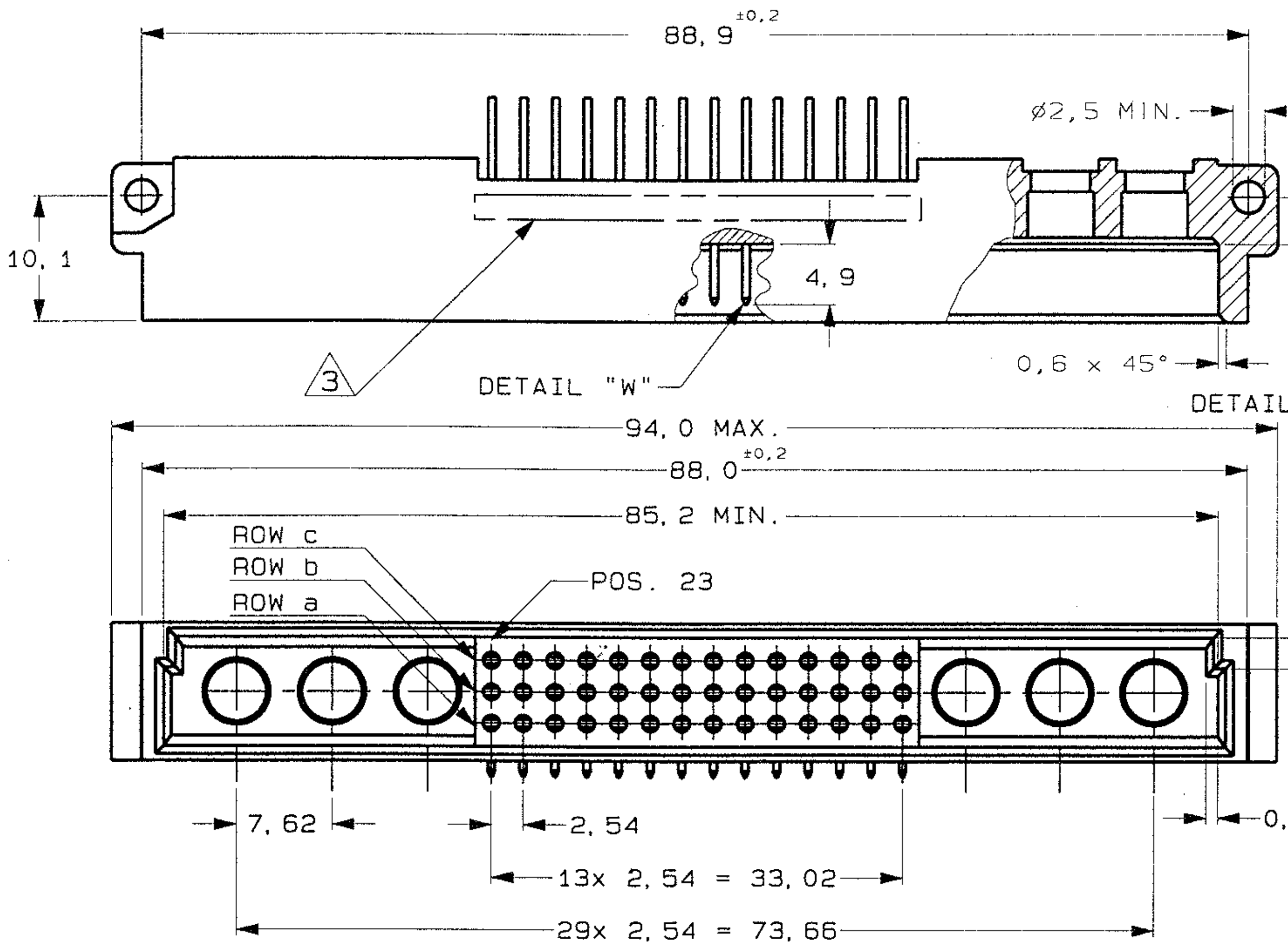

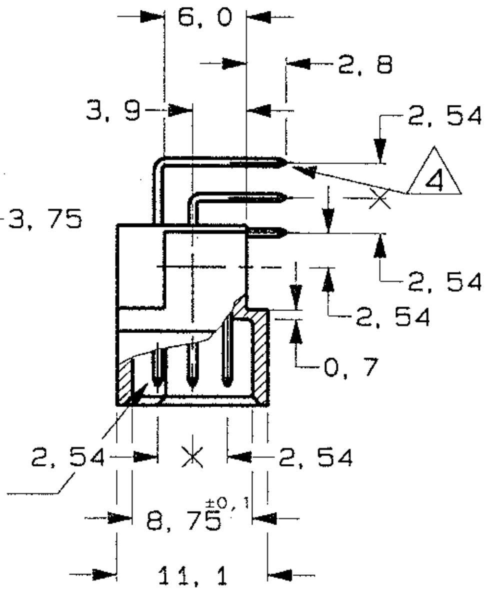

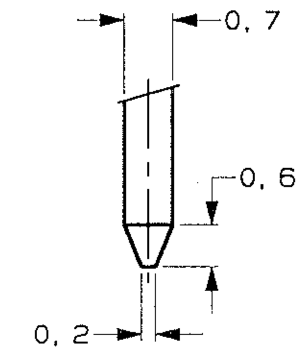

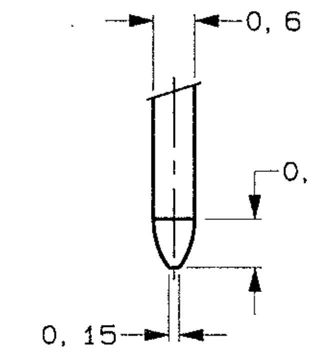

DETAIL W
SCALE 10: 1

DETAIL X
SCALE 10: 1

POS	ROW a	ROW b	ROW c
32			
31		O	
30			
29			
28		O	
27			
26			
25		O	
24			
23	X	X	X
22	X	X	X
21	X	X	X
20	X	X	X
19	X	X	X
18	X	X	X
17	X	X	X
16	X	X	X
15	X	X	X
14	X	X	X
13	X	X	X
12	X	X	X
11	X	X	X
10	X	X	X
9			
8		O	
7			
6			
5		O	
4			
3			
2		O	
1			

AN ASTERISK ,,X'' DENOTES A SIGNAL CONTACT.

AN ASTERISK ,,O'' DENOTES A POWER CAVITY.

NOTES:

1 MATERIAL :
- HOUSING : GLASSFILLED POLYESTER (GREY).
- CONTACTS: BRASS.

2 PLATING CONTACT :
-4 : 0,8μm Au OVER 1,25μm Ni AT CONTACT AREA.
ON SOLDER POST 2,54μm Sn/Pb OVER 1,25μm Ni.

3 CONNECTOR PRINTED WITH PARTNUMBER AND DATE CODE.

4 SOLDER POSTS SUITABLE FOR P.C.B. HOLES
0,8 ±0,05 OR 1,0 ±0,1 DIA.

5. ALL TOLERANCES UNLESS OTHERWISE SPECIFIED :
1 DEC. PLACE ± 0,1 mm
2 DEC. PLACE ± 0,05 mm

FINISH	MATERIAL	PARTNUMBER
SEE NOTE 2	SEE NOTE 1	-
		216977-4

LTR.	REVISION RECORD	DR.	CHK.	DATE
-	-	-	-	-
-	-	-	-	-
-	-	-	-	-
-	-	-	-	-
-	-	-	-	-
C	EH-1386-98	LvdH	RotB	31 AUG '98
B	EH-0695-97	J.G.	J.G.	13-08-97

DR.: R.v.Lokven	CHK.: R.op ten Berg	APP.: R.op ten Berg
DATE: 16-03-90	DATE: -	DATE: -

CUSTOMER DRAWING — FOR REFERENCE ONLY WILL NOT BE UPDATED

© COPYRIGHT 19- BY AMP HOLLAND B.V.
ALL INTERNATIONAL RIGHTS RESERVED. AMP PRODUCTS MAY BE COVERED BY U.S. AND FOREIGN AND/OR PATENTS PENDING.
THIS DRAWING IS UNPUBLISHED
~~RELEASED FOR PUBLICATION : 19~~

AMP

AMP HOLLAND B.V.
's-Hertogenbosch,
The Netherlands.

NAME
42 POS. DIN 41612 TYPE M MALE SOLDER CONNECTOR

DWG.No.	REV.LTR.	SHEET	
C-216977	C	1 OF 1	A3