UNCONTROLLED DOCUMENT

PART NUMBER	SSL-LXA228GD-TR11	REV.	H
DATE	E.C.N. NUMBER AND REVISION COMMENTS		REV.
08.03.94	CHG'D SPECS. WHERE NOTED.		A
11.29.94	CHG'D WHERE NOTED.		B
11.07.95	ADDED LEAD WIDTHS, UPDATED LEAD O.A.L.		C
10.21.99	E.C.N. #10550. & #10BRDR.		D
05.05.04	E.C.N. #11122. & #10BRDR.		E
07.08.04	E.C.N. #11146.		F
11.14.06	E.C.N. #11148.		G
09.22.11	E.C.N. #10BRDR. & REDRAWN.		H

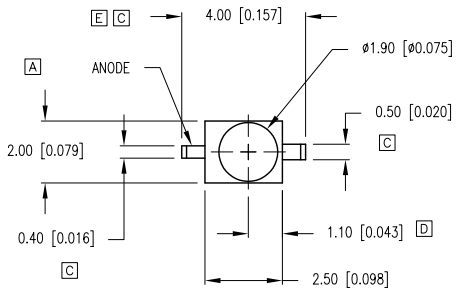

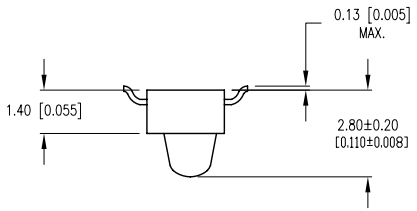

SOLDER PAD LAYOUT D F

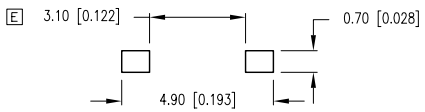

B A ELECTRO-OPTICAL CHARACTERISTICS T_A=25°C I_f=20mA

PARAMETER	MIN	TYP	MAX	UNITS	TEST COND
PEAK WAVELENGTH		565 (GREEN)		nm	
FORWARD VOLTAGE		2.1	2.8	V_f	
REVERSE VOLTAGE	5.0			V_r	I_r=100µA
AXIAL INTENSITY		4		mcd	I_f=20mA
VIEWING ANGLE		50		2x theta	
EMITTED COLOR:	GREEN				
EPOXY LENS FINISH:	GREEN DIFFUSED				

B A LIMITS OF SAFE OPERATION AT 25°C

PARAMETER	MAX	UNITS
PEAK FORWARD CURRENT*	160	mA
STEADY CURRENT	25	mA
POWER DISSIPATION	100	mW
DERATE FROM 25°C	– 1.2	mW/°C
OPERATING, STORAGE TEMP.	– 40 TO + 85	°C

* t<10µS

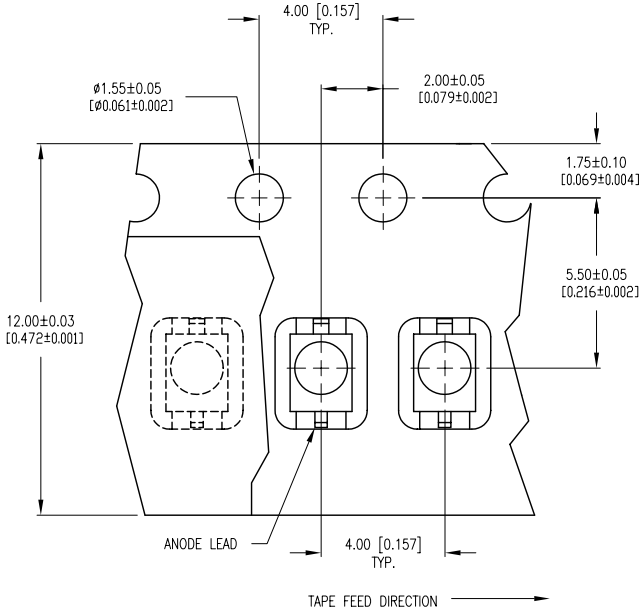

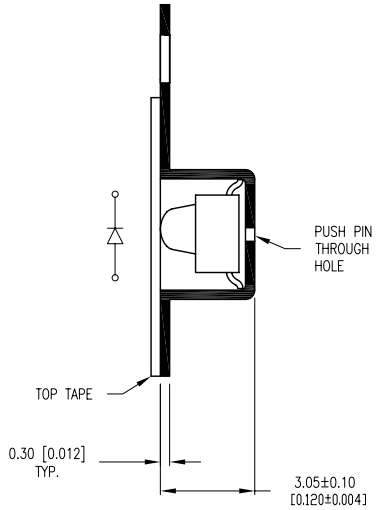

REFLOW PROFILE D

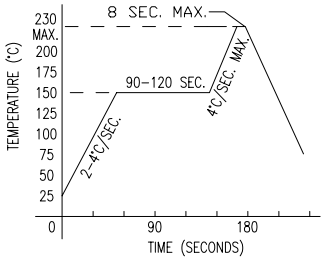

NOTES:

1. 1K PER REEL.

REPLACES PART #: SSL-LX223GD-TR11

*UNLESS OTHERWISE SPECIFIED TOLERANCES PER DECIMAL PRECISION ARE: X=±1 (±0.039), X.X=±0.5 (±0.020), X.XX=±0.25 (±0.010), X.XXX=±0.127 (±0.005). LEAD SIZE=±0.05 (±0.002), LEAD LENGTH=±0.75 (±0.030). MIN= +DECIMAL PRECISION −0.00 MAX.= +0.00 −DECIMAL PRECISION

UNCONTROLLED DOCUMENT

LUMEX®
Creating LED and LCD Solutions Together™
290 E. HELEN ROAD
PALATINE, IL 60067-6976
PHONE: +1.847.359.2790
FAX: +1.847.359.6538
WEB: WWW.LUMEX.COM

AXIAL LED, 565nm GREEN DIFFUSED LENS, GULL WING LEADS, TAPE AND REEL.

THE SPECIFICATIONS MAY CHANGE AT ANY TIME WITHOUT NOTICE DUE TO NEW MATERIALS OR PRODUCT IMPROVEMENT.

CONFIDENTIAL INFORMATION
THE INFORMATION CONTAINED IN THIS DOCUMENT IS THE PROPERTY OF LUMEX INC. EXCEPT AS SPECIFICALLY AUTHORIZED IN WRITING BY LUMEX INC., THE HOLDER OF THIS DOCUMENT SHALL KEEP ALL INFORMATION CONTAINED HEREIN CONFIDENTIAL AND SHALL PROTECT SAME IN WHOLE OR IN PART FROM DISCLOSURE AND DISSEMINATION TO ALL THIRD PARTIES.

DATE:	09.22.11	DRAWN BY:	AB
PAGE:	1 OF 1	CHKD BY:	KF
SCALE:	NTS	APRVD BY:	SS
UNIT:	mm [INCH]	Pb	