BS,C ,202175,235	C

GEN. ST.	01	02	03	04	05	06	07	08	0D	50	60	70	80	90
INT. ST.	10 11	12 13	14 18	20 31	32 33	34 38	39 40	42 43	44 45	46 48	56 70	72 73	75 76	81 82 83 84 88

REV.	DATE	DESCRIPTION	BY	C'K'D'
A	2002-03-19	B20063	MFRET	
B	2005-10-25	105-0201	VIVEK	BKP
C	2006-08-07	106-0144	VIVEK	BKP

LOADING PATTERN MATING SIDE

	01	02	03	04	05	06	07	08	09	10	11	12	13	14	15	16	17	18	19	20	21	22	23	24
y	0	0	0	0	0	0	0	0	0	0	0				0	0	0	0	0	0	0	0	0	0
h	4	4	4	4	4	4	4	0	0	4	4	0	0	4	4	0	0	4	4	0	0	4	4	0	0
g	4	4	4	4	4	4	4	4	4	0	0	4	4	0	0	4	4	0	0	4	4	0	0	4	4
f	4	5	5	4	4	5	5	0	0	5	5	0	0	5	5	0	0	5	5	0	0	5	5	0	0
e	4	4	4	4	4	4	4	4	4	0	0	4	4	0	0	4	4	0	0	4	4	0	0	4	4
d	4	4	4	4	4	4	4	0	0	4	4	0	0	4	4	0	0	4	4	0	0	4	4	0	0
c	5	4	4	5	5	4	4	5	5	0	0	5	5	0	0	5	5	0	0	5	5	0	0	5	5
b	4	4	4	4	4	4	4	0	0	4	4	0	0	4	4	0	0	4	4	0	0	4	4	0	0
a	4	4	4	4	4	4	4	4	4	0	0	4	4	0	0	4	4	0	0	4	4	0	0	4	4
z	0	0	0	0	0	0	0	0	0	0	0				0	0	0	0	0	0	0	0	0	0	0
POS	01				05					10					15					20					25

LOADED CONNECTOR ASSEMBLY
(FOR EXAMPLE)

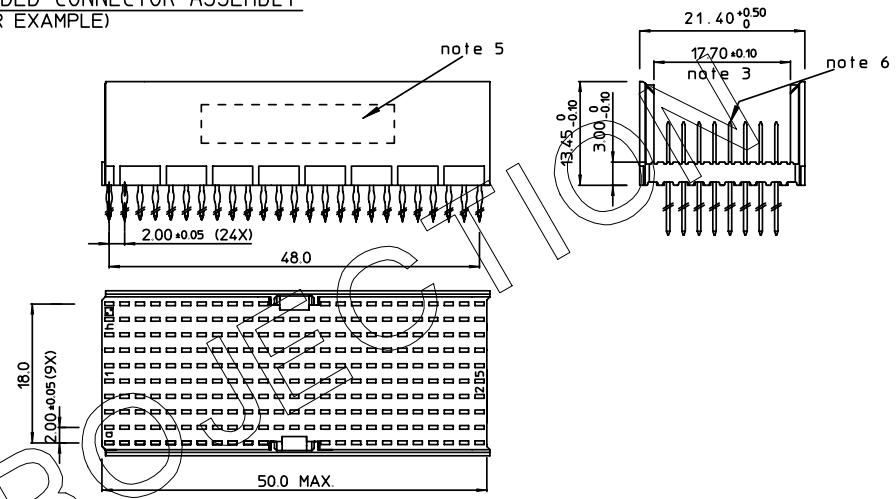

CONTACT OVERVIEW

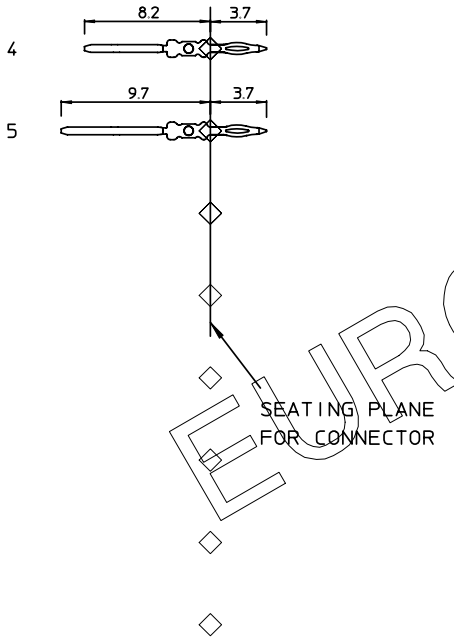

LAY-OUT P.C.B.-HOLE

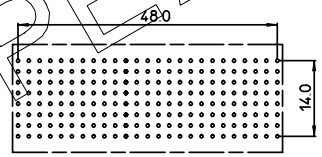

HM2P95PDG1J0- - - -

LEAD FREE INDICATOR : LF = LEAD FREE
(DIGIT 15 & 16)

PLATING CODE (DIGIT 13 AND 14)
(REF DWG No. BS,C ,201844,003)

NOTES:

1. THIS PRODUCT IS CSA APPROVED.
2. THIS PRODUCT IS UL RECOGNIZED.
3. MEASURED AT THE BOTTOM.
4. MATERIAL CONTACT: PHOSPHORBRONZE
   HOUSING: CREAM WHITE GLASSFILLED POLYESTER UL-94V0
5. CONNECTOR PRINTED WITH P/N AND DATE CODE.
6. FOR ACTUAL CONTACT LOADINGS, SEE LOADING PATTERN MATING SIDE.
7. SHAPE OF CONNECTOR HOUSING CAN ALTER DEPENDING ON PRODUCTION LOCATION.
8. THE PRODUCT (LF) MEETS EUROPEAN UNION DIRECTIVES AND OTHER COUNTRY REGULATIONS AS DESCRIBED IN GS-22-008
9. FOR RECOMMENDED PTH DIMENSIONS REFER DRAWING : BS,A ,201572,001

	APPR.	DATE	SIGN.
1DEC ±0,2	DRAFT	2002-03-19	M.Fret
2DEC ±0,1	CHECKED		
ANGLES ±1°	PROD. MGR.		
	PR.ENG.MGR.		
	PR.MGT.MGR.		

WE RESERVE THE RIGHT TO CHANGE DIMENSIONS OR REQUIREMENTS WITHOUT PRIOR NOTICE.

ALL DIMENSIONS IN MM

REFERENCES

MPACS 8R STR HDR CONN TYPE DE

CAT. No. HM2P95PDG1J0- - - -

FCI www.fciconnect.com

SCALE

BS,C ,202175,235 — DRAWING No.

CUSTOMER DRAWING

C — REVISION

THIS IS OUR EXCLUSIVE PROPERTY. IT IS NOT TO BE COPIED, REPRINTED OR DISCLOSED TO A THIRD PARTY, NOR USED FOR MANUFACTURING WITHOUT OUR WRITTEN CONSENT, AND HAS TO BE RETURNED TO US IN CASE OF NO USAGE

DIT IS ONZE EIGENDOM EN MAG NOCH NAGEMAAKT, HERDRUKT, OVERGEMAAKT AAN DERDEN, NOCH VOOR FABRIKATIE GEBRUIKT WORDEN, ZONDER ONZE SCHRIFTELIJKE TOELATING. BIJ NIET GEBRUIK IS TERUGZENDING VERPLICHT.

EUROPEAN PROPOSAL