REV.	DATE	DESCRIPTION
NC	09/22/03	INITIAL RELEASE
A	03/18/08	REVISE BODY PLATING TO GOLD

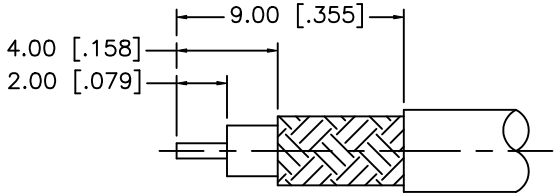

RECOMMENDED CABLE STRIPPING DIM'S

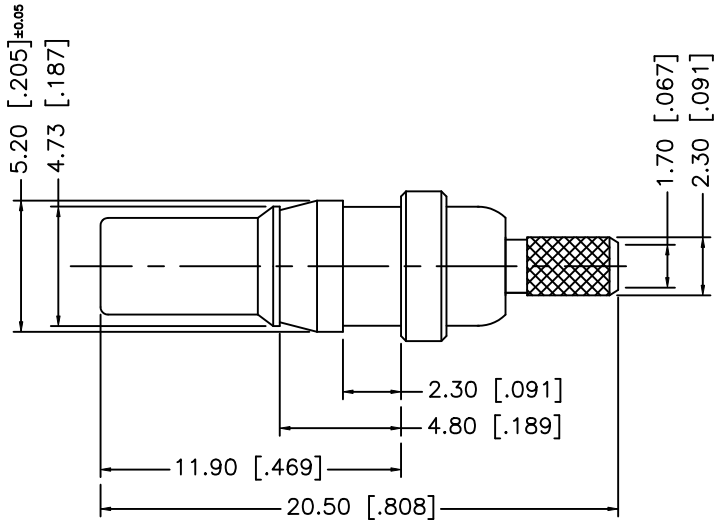

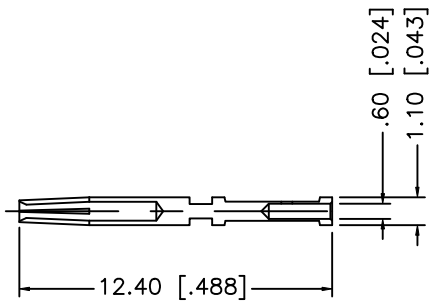

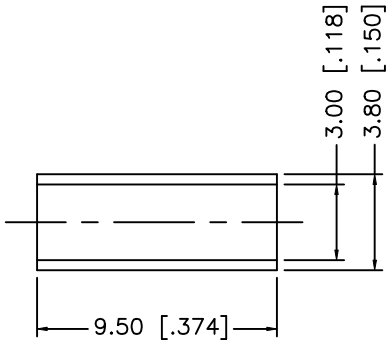

NOTE:

1. CRIMPED FERRULE HEX CRIMP SIZE .128"
2. CONTACT PIN TO SOLDER

	DESCRIPTION	MATERIAL	FINISH	QTY
8				
7				
6	FERRULE	COPPER	NICKEL	1
5	CONTACT PIN	BER. COPPER	GOLD	1
4	BARREL	BRASS	NICKEL	1
3	INSULATOR	TEFLON	NATURAL	1
2	RETAINER RING	BER. COPPER	NICKEL	1
1	BODY	BRASS	GOLD	1

UNLESS OTHERWISE SPECIFIED DIMENSIONS ARE IN MILLIMETERS. DIMENSIONS IN [ ] ARE IN INCHES AND FOR CUSTOMER REFERANCE ONLY.

UNLESS OTHERWISE SPECIFIED TOLERANCES FOR MILLIMETERS ARE:
0.5 – 8mm ± 0.20mm
8 – 30mm ± 0.40mm
30 – 120mm ± 0.50mm

UNLESS OTHERWISE SPECIFIED TOLERANCES FOR INCHES ARE:
.020 – .315 = ± 0.007"
.315 – 1.180 = ± 0.015"
1.180 – 4.724 = ± 0.020"

DO NOT SCALE DRAWING

APPROVALS		DATE
DRAWN	G.R.S.	03/18/08
CHECKED		
ISSUED		
SHEET	1 OF 1	
CAD FILE	C:/282/282104–75.DWG	

Amphenol Connex

PART DESCRIPTION: 1.0/2.3 CRIMP JACK (FOR RG–179/U, 187A/U)

PART NO. 282104–75

DWG. NO. 282104–75.DWG | REV. A | SIZE A | SCALE NA