LOADING PATTERN MATING SIDE

f	6	6	6	6	6	0	0	0	0	0	0				6	6	6	6	6	6	6	6	6	6
e	5	5	5	5	6	5	5	5	5	5	6				5	5	5	5	5	5	5	5	6	5
d	5	5	5	5	5	5	5	5	5	5	5				6	6	6	6	6	6	6	6	5	5
c	5	5	4	5	5	5	5	5	5	5	5				5	5	5	5	5	5	5	5	5	5
b	5	5	5	5	5	5	5	5	5	5	5				5	5	5	5	5	5	5	5	5	5
a	5	5	5	5	6	5	5	5	5	5	6				5	5	5	5	5	5	5	5	5	5
z	0	0	0	0	0	0	0	0	0	0	0				0	0	0	0	0	0	0	0	0	0
POS	01				05					10					15					20				25

LOADED CONNECTOR ASSEMBLY
(FOR EXAMPLE)

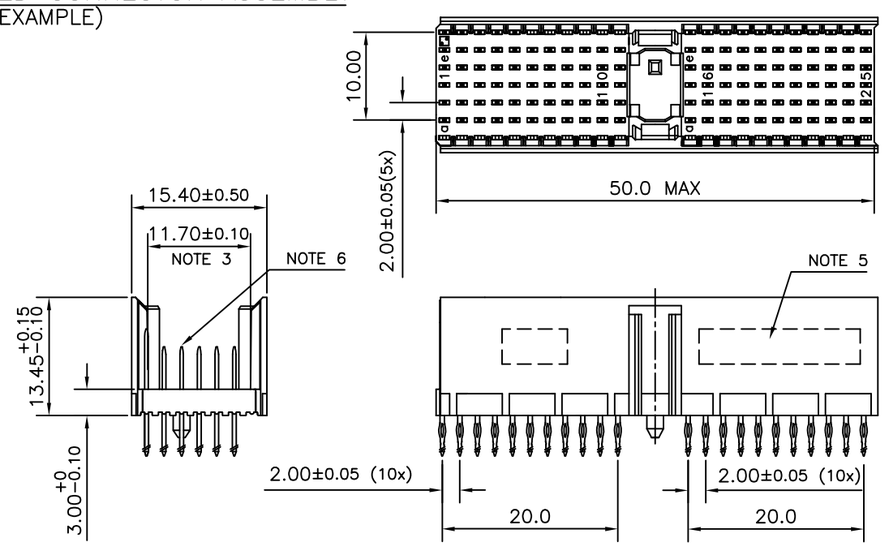

CONTACT OVERVIEW

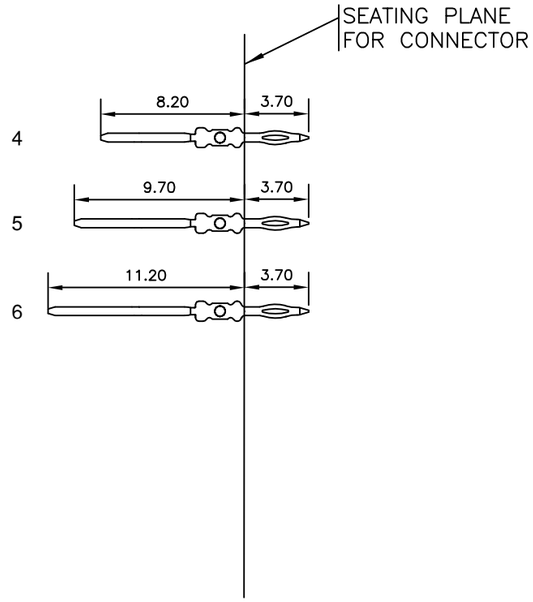

LAY-OUT P.C.B.-HOLE

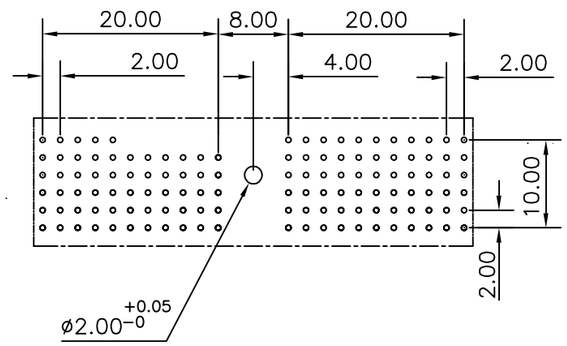

HM2P07PDF7Y5- -

LEAD FREE INDICATOR : LF = LEAD FREE
(DIGIT 15 & 16)

PLATING CODE (DIGIT 13 AND 14)
(REF DRW NO. BS,C , 201844 , 003)

NOTES

1. THIS PRODUCT IS CSA APPROVED.
2. THIS PRODUCT IS UL RECOGNIZED.
3. MEASURED AT THE BOTTOM.
4. MATERIAL CONTACT: PHOSPHORBRONZE
   HOUSING: CREAM WHITE GLASS FILLED POLYESTER UL-94V0
5. CONNECTOR PRINTED WITH P/N AND DATE CODE.
6. FOR ACTUAL CONTACT LOADINGS, SEE LOADING PATTERN MATING SIDE.
7. SHAPE OF CONNECTOR HOUSING CAN ALTER DEPENDING ON PRODUCTION LOCATION
8. THE PRODUCT (LF) MEETS EUROPEAN UNION DIRECTIVES AND OTHER COUNTRY REGULATIONS AS DESCRIBED IN GS-22-008
9. FOR RECOMMENDED PTH DIMENSIONS REFER DRAWING : BS, A , 201572 , 001

CATALOG NO: HM2P07PDF7Y5- - - -

ltr	ecn no	dr	date
A	I03-0012	JAY	27/08/2003
B	I05-0171	MINI	23/09/2005
C	I06-0077	MINI	19/06/2006

dr	JAYADEEP P	27/05/2003
engr	BIJU K PAUL	27/05/2003
chr	BIJU K PAUL	19/06/2006
appd	K V SIVADAS	19/06/2006

mat'l. code: SEE NOTE 4
surface: ISO 1302
tolerance: ISO 406 ISO 1101
tolerances unless otherwise specified: angles 0°±1°; linear .0±0.2, .00±0.1
projection
MM
scale –
product family: MILLIPACS
title: MPACS 5+2R STR HDR PF CONN TYPE A
dwg no: BS, C ,203028, 015
sheet 1 of 1
size A3
type: Product Customer Drawing
sheet index: revision C; sheet 1

FCIconnect.com
Copyright FCI

form: A3

PDM: Rev:C STATUS:Released Printed: Dec 03, 2007