THIS DRAWING IS UNPUBLISHED. RELEASED FOR PUBLICATION -.- .
© COPYRIGHT - BY TYCO ELECTRONICS CORPORATION, ALL RIGHTS RESERVED.

LOC	DIST
AD	39

REVISIONS

P	LTR	DESCRIPTION	DATE	DWN	APVD
	M	REV PER 0G3C-0373-02	11OCT02	RB	JG

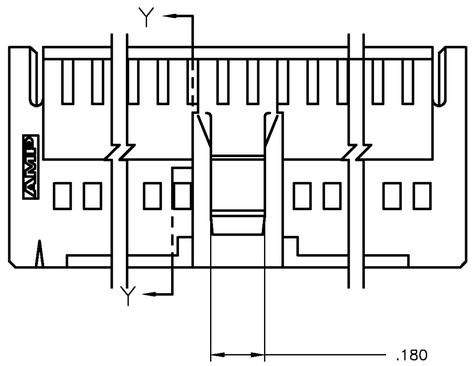

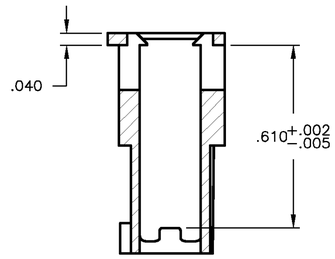

SECTION Y—Y

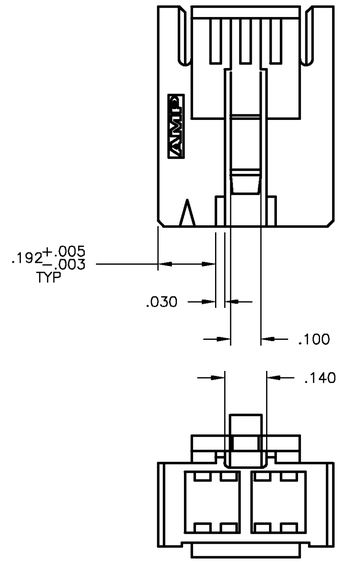

LATCH CONFIGURATION
FOR 6, 8 AND 10 POSN
(SEE TABLE)

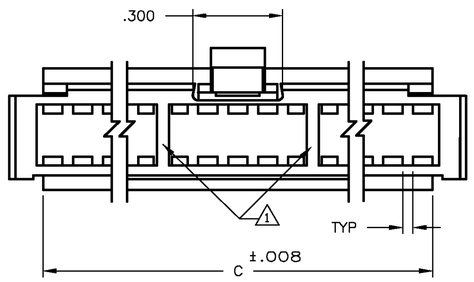

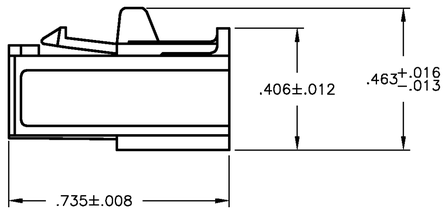

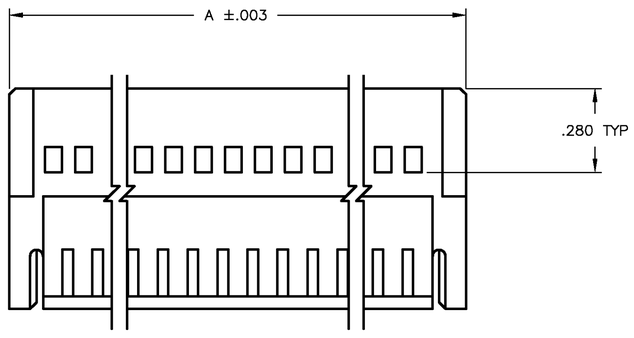

1. SEE TABLE FOR RIB QTY
2. THIS COUPLING SHROUD IS TO BE USED WITH AMPMODU MTE® RECEPTACLE ASSEMBLIES WITH GUIDE RIBS THE NUMBER OF POSITIONS LISTED EQUALS THE TOTAL NUMBER OF POSITIONS WHICH CAN BE CONTAINED WITHIN THE COUPLING SHROUD
3. FLAME RETARDANT THERMOPLASTIC, COLOR—BLACK.
4. PRELIMINARY PART — NOT RELEASED FOR PRODUCTION.

	RIB QTY	C	A	NO OF POSN	PART NUMBER
4	1	.260	.485	6	1-103681-7
SUPERSEDED BY 1-104500-1	2	2.460	2.685	50	1-103681-6
SUPERSEDED BY 1-104500-0	2	1.960	2.185	40	1-103681-5
SUPERSEDED BY 104500-9	2	1.660	1.885	34	1-103681-4
SUPERSEDED BY 104500-8	2	1.560	1.785	32	1-103681-3
SUPERSEDED BY 104500-7	2	1.460	1.685	30	1-103681-2
SUPERSEDED BY 104500-6	2	1.360	1.585	28	1-103681-1
SUPERSEDED BY 104500-5	2	1.260	1.485	26	1-103681-0
SUPERSEDED BY 104500-4	2	1.160	1.385	24	103681-9
SUPERSEDED BY 104500-3	2	1.060	1.285	22	103681-8
SUPERSEDED BY 104500-2	2	.960	1.185	20	103681-7
SUPERSEDED BY 104500-1	2	.860	1.085	18	103681-6
	1	.760	.985	16	103681-5
	1	.660	.885	14	103681-4
	1	.560	.785	12	103681-3
	1	.460	.685	10	103681-2
	1	.360	.585	8	103681-1

THIS DRAWING IS A CONTROLLED DOCUMENT.

DIMENSIONS: INCHES

TOLERANCES UNLESS OTHERWISE SPECIFIED:
0 PLC ± –
1 PLC ± –
2 PLC ± –
3 PLC ± .005
4 PLC ± –
ANGLES ± –

MATERIAL 3
FINISH –

DWN H MOLL 10-7-87
CHK P de JONG 10-7-87
APVD –

PRODUCT SPEC 108-25034
APPLICATION SPEC 114-25026
WEIGHT –

AMP Tyco Electronics Corporation
Harrisburg, PA 17105

NAME COUPLING SHROUD, AMPMODU MTE, .100X.100 C/L, DOUBLE ROW

SIZE	CAGE CODE	DRAWING NO	RESTRICTED TO
A1	00779	C-103681	—

CUSTOMER DRAWING | SCALE 4:1 | SHEET 1 OF 1 | REV M