THIS DRAWING IS UNPUBLISHED. RELEASED FOR PUBLICATION -
© COPYRIGHT copyright_date BY - ALL RIGHTS RESERVED.

REVISIONS					
P	LTR	DESCRIPTION	DATE	DWN	APVD
	A3	REVISED PER ECR-16-016768	17AUG2017	AP	MKO
	A4	ECR-17-013084	29MAR18	SG	MKO
	A5	ECR-21-123293	21FEB2022	RK	JB

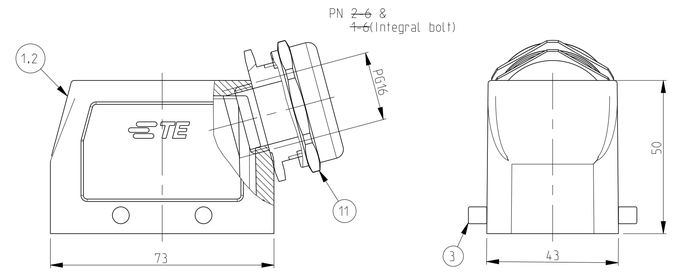

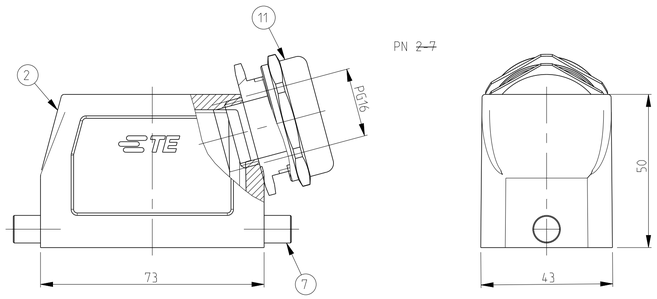

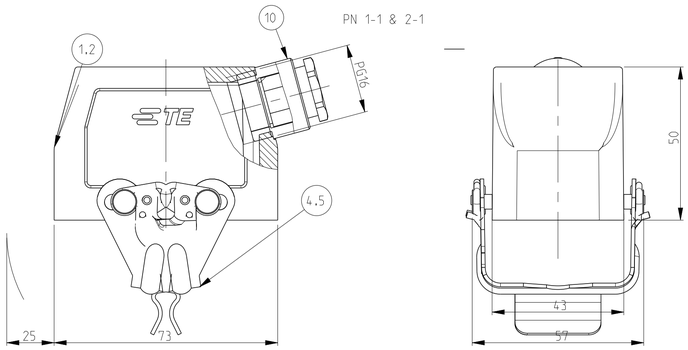

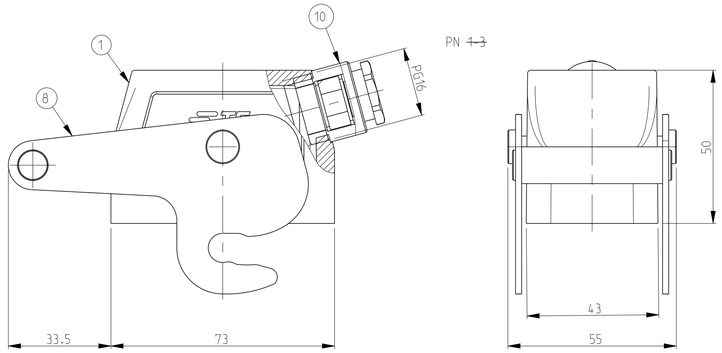

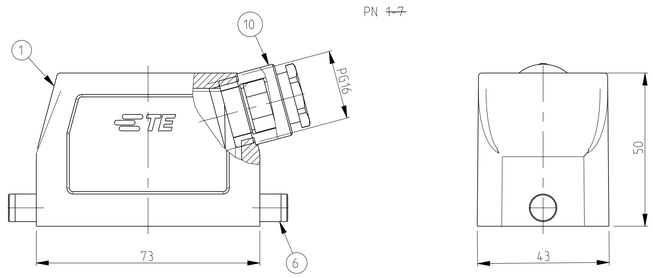

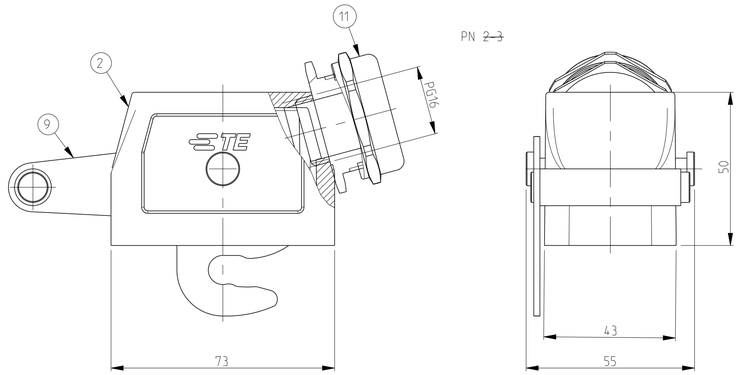

NOTES.

1 Material:Housing:Aluminium Diecasting Alloy

2 Surface-Powder Varnish Grey
-Aluminium Oxide +
Varnish Black

3 Varnish on the inside not necessary

4 Packaging
Quantity 5 Pieces in a box

~~PN 2-7~~	~~PN 1-3~~	~~PN 2-3~~
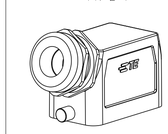	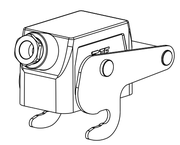	
SCALE 1:2	SCALE 1:2	SCALE 1:2
PN 2-6 & ~~1-6~~(Integral bolt)	PN 1-1 & ~~2-1~~	PN ~~1-7~~
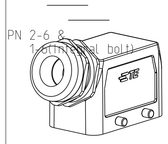	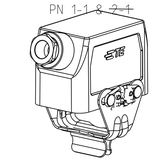	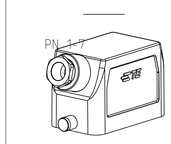
SCALE 1:2	SCALE 1:2	SCALE 1:2

2-3	1-3	2-7	1-7	2-1	1-1	2-6	1-6	DESCRIPTION	MATERIAL	SURFACE	COLOR	ITEM NO	REMARKS
OBSOLETE													
	OBSOLETE												
		OBSOLETE											
			OBSOLETE										
				OBSOLETE									
					OBSOLETE								
1			1		1		1	Gland fitting	Brass	Nickel plated	Blue	11	PG16
	1			1		1		Cable connection round	Brass	Nickel plated	Blue	10	PG16
1								ZB Central clip	Stainless steel	Blank	-	9	
	1							ZB Central clip	Steel	Zinc plated	Blue	8	
		2						LB-Clip bolt	Stainless steel	Blank	-	7	
			2					LB-Clip bolt	Steel	Zinc plated	Blue	6	
				2				VS-Side clip	Stainless steel	Blank	-	5	
					2			VS-Side clip	Steel	Zinc plated	Blue	4	
						4		VS-Clip bolt	Stainless steel	Blank	-	3	
1		1		1		1		HB-K Hood	Aluminium	Aluminium oxide	Black	2	
	1		1		1		1	HB Hood	Aluminium	-	Grey	1	

DESCRIPTION
HB.10.STS.1.16
HB-K.10.STS.1.16
HB.10.STS-VS.1.16
HB-K.10.STS-VS.1.16
HB10.STS-GR.1.16
HB-K.10.STS-GR.1.16
HB-Z.10.STS-ZB.1.16
HB-K/Z.10.STS-ZB.1.16

THIS DRAWING IS A CONTROLLED DOCUMENT.

DIMENSIONS: mm

TOLERANCES UNLESS OTHERWISE SPECIFIED: ASME Y14.5M-1994 DIN ISO 2768-mK
0 PLC ±
1 PLC ±
2 PLC ±
3 PLC ±
4 PLC ±
ANGLES ±

MATERIAL -
FINISH -

DWN Schneider 05.12.02
CHK Schweiger 05.12.02
APVD -
PRODUCT SPEC -
APPLICATION SPEC -
WEIGHT

TE Connectivity

NAME Hood HB.10.STS.1.16

SIZE	CAGE CODE	DRAWING NO	RESTRICTED TO
A1	00779	C-1102259	

CUSTOMER DRAWING | SCALE 1:1 | SHEET 1 OF 1 | REV A5

4805 (3/13)