Alle Rechte vorbehalten/ *All rights reserved*

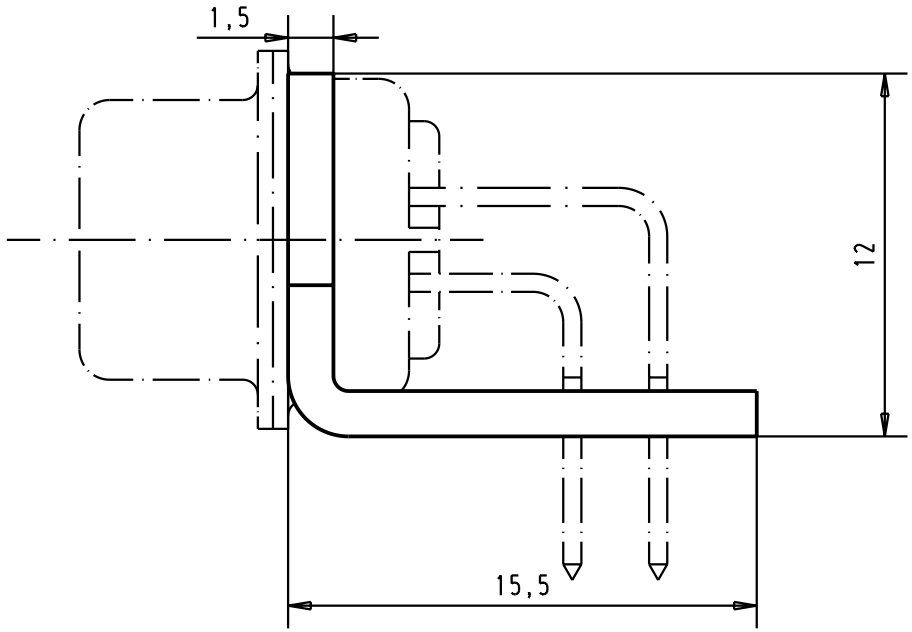

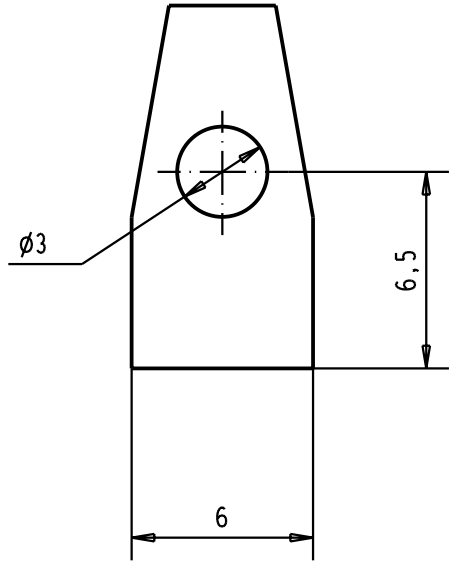

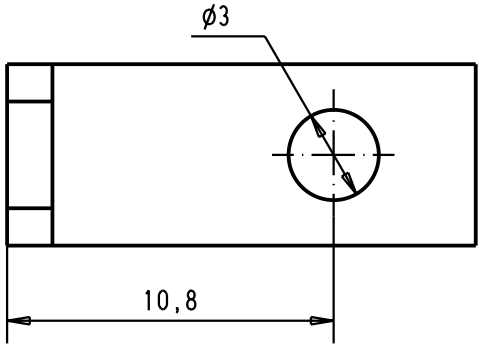

							Dat.	Name	All Dim. in mm Orig. Size DIN A 4	D-Sub, Fixing metal bracket for 9-15-25 and 37 poles	Maßstab/ *Scale* 4:1
						Detail.	09-APR-02	CV			
						Insp.					
						Stand.					
09 67 000 9910						HARTING EURL F-95972 Paris				TB 09670009910	Blatt/ *Page* 1
			29768	09-APR-02	CV						
Part number			Mod.	Dat.	Name					Sub.	