THIS DRAWING IS UNPUBLISHED. RELEASED FOR PUBLICATION 20
© COPYRIGHT 20 BY TYCO ELECTRONICS CORPORATION. ALL RIGHTS RESERVED.

PART NUMBER	REV	TERMINATOR	FEED TYPE	DESCRIPTION
1528816-1	A	LEADMAKER	MECH POST FEED	CUTS CARRIER
1528816-2	A	BENCH	MECH PRE FEED	CUTS CARRIER
1528816-6	A	LEADMAKER	MECH POST FEED	CONTINUOUS CARRIER
7-1528816-1	A	LEADMAKER	MECH POST FEED	-1 AND SPARE PARTS
7-1528816-2	A	BENCH	MECH PRE FEED	-2 AND SPARE PARTS
7-1528816-6	A	LEADMAKER	MECH POST FEED	-6 AND SPARE PARTS
7-1528816-7	A	-	-	SPARE PARTS KIT

SET UP GAGE 458637-3

LOC	DIST
A	66

REVISIONS

P	LTR	DESCRIPTION	DATE	DWN	APVD
	A1	ECR-09-012292	01JUN2009	RK	GB

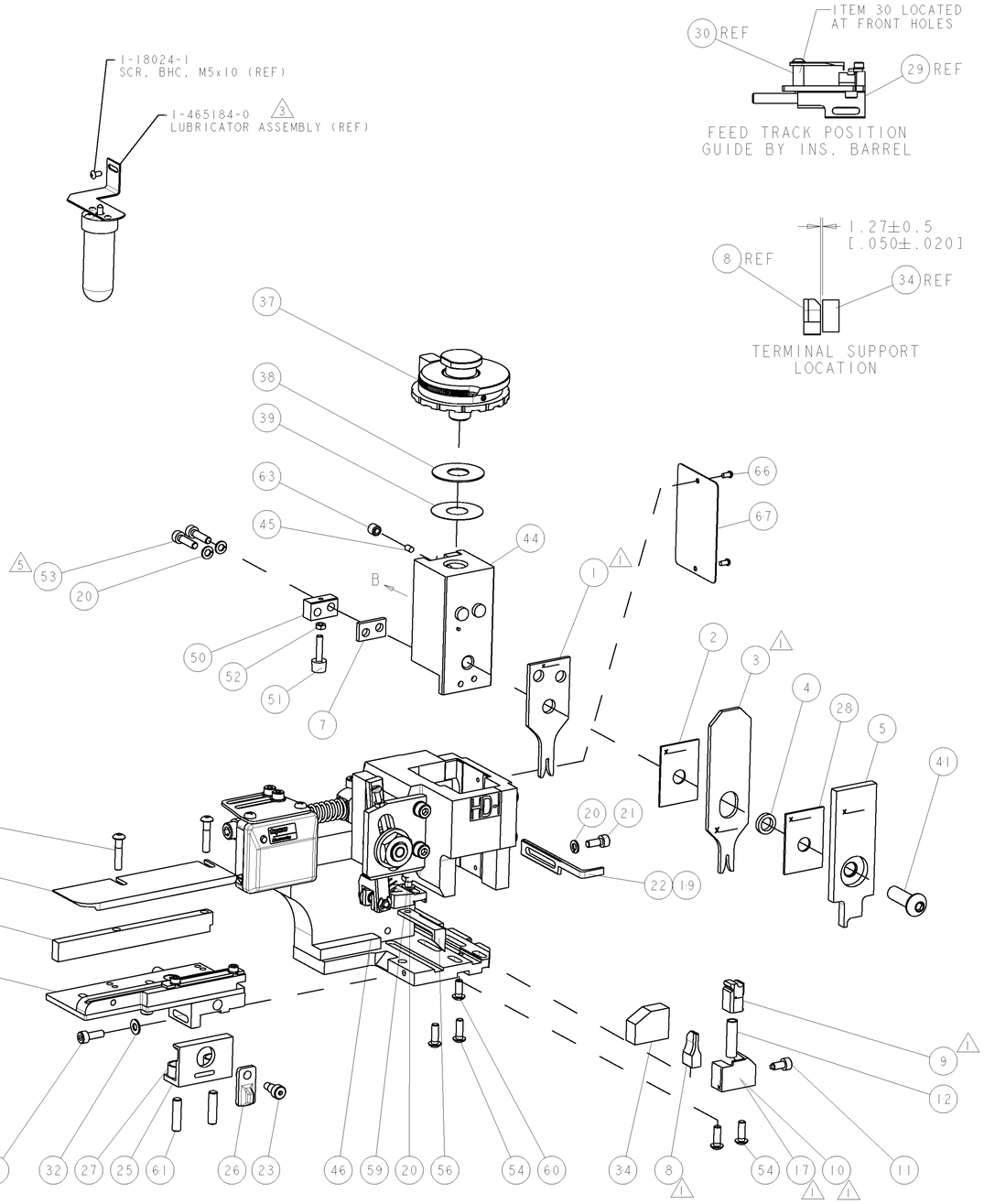

CRIMP DATA	KOSTAL TERMINAL	KOSTAL CRIMP SPECS
TERMINAL NAME: KOSTAL MLK 1.2 RECEPTACLE		

CRIMP	SIZE	TYPE	RANGE
WIRE	1.40 [.055 IN]	F	0.35mm²-0.50mm²
INSUL	1.78 [.070 IN]	O	1.20-1.60 [.047-.063 IN]

WIRE STRIP LENGTH 3.10-3.40 [.122-.134 IN]

APPL INSTRUCTIONS 408-8322 & 408-8490

TERMINAL APPL SPEC: KOSTAL DATA SHEET MLK 1.2m

FEED 8.00 [.315 IN]

TERMINALS APPLIED

TE TERM PN	KOSTAL TERM PN	TE TERM PN	KOSTAL TERM PN
1949380-1	3 21 24 73406 0	1949957-1	3 21 24 73401 0
1949380-2	3 21 25 73406 0	1949957-2	3 21 25 73401 0
1949380-3	3 21 40 73406 0	1949957-3	3 21 40 73401 0
-	-	-	-

WIRE SIZE	CRIMP HEIGHT *	REF SETTING *
0.50mm²	0.92 ±0.03 [.036 ±.001 IN]	C2
0.35mm²	0.82 ±0.03 [.032 ±.001 IN]	C7
-	-	-
-	-	-
-	-	-
-	-	-
-	-	-
-	-	-
-	-	-
-	-	-
-	-	-
-	-	-

1. RECOMMENDED SPARE PARTS.
2. GREASE RAM, CAM, CAM FOLLOWER AND FEED ROD LIGHTLY.
3. CERTAIN TERMINALS REQUIRE LUBRICATION. REFER TO THE APPLICATOR INSTRUCTION SHEET FOR MORE INFORMATION.
4. LUBRICATE DAILY PER THE APPLICATOR INSTRUCTION SHEET SUPPLIED WITH THE APPLICATOR.
5. ITEM 53, CUT TO LENGTH AT ASSEMBLY.

* WARNING
ON INSTALLATION, SET WIRE DISC TO LARGEST WIRE SIZE SETTING. USE OF SETTINGS BELOW MIN. REQUIRED CRIMP HEIGHT SETTING WILL CAUSE DAMAGE TO CRIMP TOOLING.

VIEW B ROTATED 180°

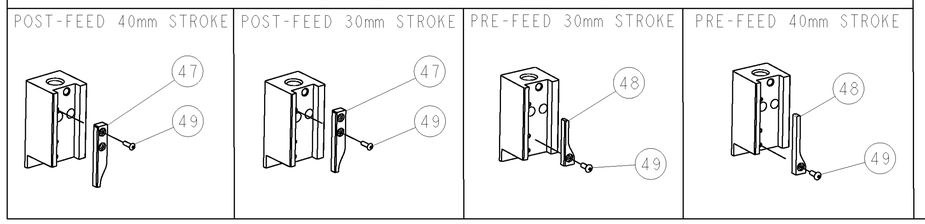

ITEM NO	DESCRIPTION	PART NO	-77	-76	-72	-71	-6	-2	-1
84	-	-	-	-	-	-	-	-	-
83	-	-	-	-	-	-	-	-	-
82	-	-	-	-	-	-	-	-	-
81	-	-	-	-	-	-	-	-	-
80	-	-	-	-	-	-	-	-	-
79	-	-	-	-	-	-	-	-	-
78	-	-	-	-	-	-	-	-	-
77	-	-	-	-	-	-	-	-	-
76	-	-	-	-	-	-	-	-	-
75	-	-	-	-	-	-	-	-	-
74	-	-	-	-	-	-	-	-	-
73	-	-	-	-	-	-	-	-	-
72	-	-	-	-	-	-	-	-	-
71	1338705-3	DOCUMENTATION PACKAGE	-	1	1	1	1	1	1
70	-	-	-	-	-	-	-	-	-
69	-	-	-	-	-	-	-	-	-
68	-	-	-	-	-	-	-	-	-
67	461264-5	PLATE, IDENTIFICATION	-	1	1	1	1	1	1
66	21017-2	SCREW, DRIVE	-	2	2	2	2	2	2
65	-	-	-	-	-	-	-	-	-
64	-	-	-	-	-	-	-	-	-
63	3-18031-0	SCR, SET, CUP POINT M6 X 6.0	-	1	1	1	1	1	1
62	-	-	-	-	-	-	-	-	-
61	2-18032-5	SCR, SET, FLT POINT M5 X 20.0	-	2	2	2	2	2	2
60	18024-7	SCR, BTN SKT HD CAP (M4 X 10.0)	-	1	1	1	1	1	1
59	5-18022-2	SCR, HEX HD CAP M4 X 8.0	-	1	1	1	1	1	1
58	-	-	-	-	-	-	-	-	-
57	-	-	-	-	-	-	-	-	-
56	1338685-1	PAWL, FEED	-	1	1	1	1	1	1
55	-	-	-	-	-	-	-	-	-
54	18024-8	SCR, BTN SKT HD CAP (M4 X 12.0)	-	4	4	4	4	4	4
53	1-18023-3	SCR, SKT HD CAP M4 X 16.0	-	2	2	2	2	2	2
52	18030-1	NUT, HEX, REG M3	-	1	1	1	1	1	1
51	811242-5	BUMPER, HOLD DOWN	-	1	1	1	1	1	1
50	690753-2	SPACER, TONKER	-	1	1	1	1	1	1
49	18024-3	SCR, BTN SKT HD CAP (M3 X 10.0)	-	1	1	1	1	1	1
48	1338675-1	CAM, UNIVERSAL PRE FEED	-	-	1	-	-	1	-
47	1338676-1	CAM, UNIVERSAL POST-FEED	-	1	-	1	1	-	1
46	1320999-3	APPLICATOR SUBASSEMBLY, HDI	-	1	1	1	1	1	1
45	690191-1	PLUG,NYLON	-	1	1	1	1	1	1
44	1338660-1	RAM	-	1	1	1	1	1	1
43	-	-	-	-	-	-	-	-	-
42	-	-	-	-	-	-	-	-	-
41	2-18024-6	SCR, BTN SKT HD CAP (M8 X 25.0)	-	1	1	1	1	1	1
40	-	-	-	-	-	-	-	-	-
39	690125-1	SHIM SUB-ASSY	-	1	1	1	1	1	1
38	469367-8	SHIM	-	1	1	1	1	1	1
37	879103-3	FINE ADJUST HEAD ASSEMBLY	-	1	1	1	1	1	1
36	-	-	-	-	-	-	-	-	-
35	-	-	-	-	-	-	-	-	-
34	2-1320934-5	SUPPORT, TERMINAL	-	1	1	1	1	1	1
33	1-18024-0	SCR, BTN SKT HD CAP (M4 X 20.0)	-	2	2	2	2	2	2
32	18027-2	WASHER, FLAT, REG M4	-	1	1	1	1	1	1
31	1-18023-2	SCR, SKT HD CAP M4 X 12.0	-	1	1	1	1	1	1
30	1320908-4	SPACER, STRIP GUIDE	-	1	1	1	1	1	1
29	1-1633073-6	STRIP GUIDE ASSEMBLY	-	1	1	1	1	1	1
28	1-455888-0	SPACER, CRIMPER	-	1	1	1	1	1	1
27	1-22284-0	SPRING, COMPRESSION	-	2	2	2	2	2	2
26	356835-1	LEVER, DRAG RELEASE	-	1	1	1	1	1	1
25	240792-1	DRAG, TERMINAL	-	1	1	1	1	1	1
24	1320928-1	PLATE, STRIP GUIDE	-	1	1	1	1	1	1
23	980371-4	SCR, SKT HD SHLDR 5.0 DIA X 6.0	-	1	1	1	1	1	1
22	690472-2	STRIPPER	-	1	-	1	1	-	1
21	1-18023-1	SCR, SKT HD CAP M4 X 10.0	-	1	1	1	1	1	1
20	18025-2	WASHER, SPRG LOCK, REG M4	-	4	4	4	4	4	4
19	690472-1	STRIPPER	-	-	1	-	-	1	-
18	-	-	-	-	-	-	-	-	-
17	1338684-1	SHEAR HOLDER, FRONT	-	1	-	-	1	-	-
16	-	-	-	-	-	-	-	-	-
15	-	-	-	-	-	-	-	-	-
14	-	-	-	-	-	-	-	-	-
13	-	-	-	-	-	-	-	-	-
12	3-22280-3	SPRING, COMPRESSION	-	1	1	1	1	1	1
11	356885-4	STOP, SHEAR	-	1	1	1	1	1	1
10	1320921-1	SHEAR HOLDER, FRONT, CUT	-	-	1	-	1	1	1
9	462006-1	FLOATING SHEAR, FRONT	-	1	1	1	1	1	1
8	1633128-2	ANVIL, COMBINATION .055	1	2	2	2	1	1	1
7	1-240641-6	SPACER	-	1	1	1	1	1	1
6	-	-	-	-	-	-	-	-	-
5	2-455889-0	DEPRESSOR, SHEAR	-	1	1	1	1	1	1
4	238011-4	BLOCK, CRIMPER SPACER	-	1	1	1	1	1	1
3	4-683454-1	CRIMPER, INSULATION O	1	2	2	2	1	1	1
2	455888-8	SPACER, CRIMPER	-	1	1	1	1	1	1
1	3-456402-5	CRIMPER, WIRE PREMIUM	1	2	2	2	1	1	1
ITEM NO	DESCRIPTION	PART NO	-77	-76	-72	-71	-6	-2	-1

THIS DRAWING IS A CONTROLLED DOCUMENT FOR TYCO ELECTRONICS CORPORATION. IT IS SUBJECT TO CHANGE AND THE CONTROLLING ENGINEERING ORGANIZATION SHOULD BE CONTACTED FOR THE LATEST REVISION.

DIMENSIONS: mm [IN]

TOLERANCES UNLESS OTHERWISE SPECIFIED: 0 PLC ±- ; 1 PLC ±- ; 2 PLC ±- ; 3 PLC ±- ; 4 PLC ±- ; ANGLES ±-

MATERIAL - -

FINISH - -

DWN 14JUN2007 D PROUSE
CHK -
APVD 14JUN2007 M.CLIFFORD

PRODUCT SPEC -
APPLICATION SPEC See Table
WEIGHT -

Tyco Electronics
Tyco Electronics
Harrisburg, PA 17105-3608

NAME FINE ADJUST SIDE FEED HDI APPLICATOR -

SIZE A1 | CAGE CODE 00779 | DRAWING NO C-1528816 | RESTRICTED TO -

CUSTOMER DRAWING | SCALE 3:5 | SHEET 1 OF 1 | REV A1