Alle Rechte vorbehalten/ *All rights reserved*

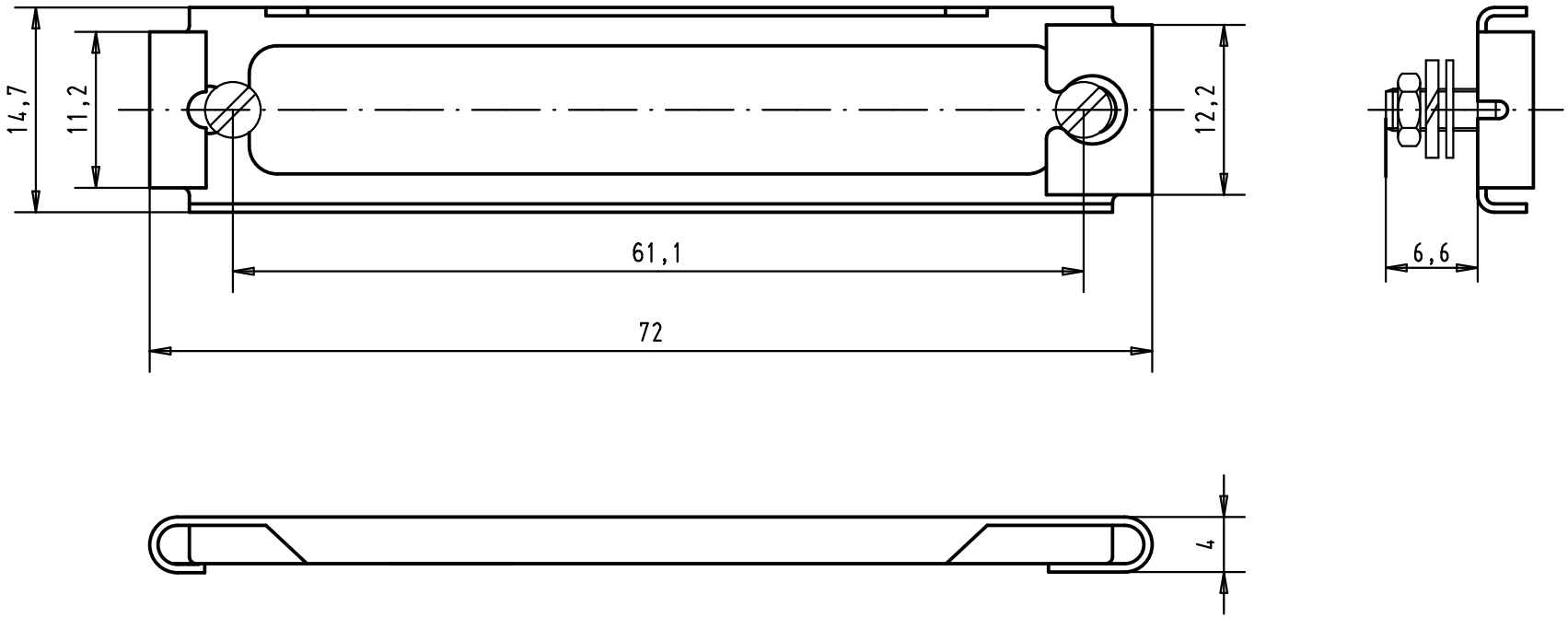

							Dat.	Name		Slide locking device 50 poles corrosion resistant steel	Maßstab/ *Scale*
						Detail.	28-MAR-02	CV	All Dim. in mm Orig. Size DIN A 4		2:1
						Insp.					
						Stand.					
			36220	22-NOV-10	SC	HARTING EURL F-95972 Paris				TB 09 67 000 9918	Blatt/ *Page*
09 67 000 9918			29760	28-MAR-02	CV					Sub.	1/1
Part number			Mod.	Dat.	Name						