BS,C ,202788,064	D

GEN. ST.	01	02	03	04	05	06	07	08	0D	50	60	70	80	90
INT. ST.	10 11	12 13	14 18	20 31	32 33	34 38	39 40	42 43	44 45	46 48	56 70	72 73	75 76	81 82	83 84	88

REV.	DATE	DESCRIPTION	BY	C'K'D'
A	2001-09-14	CONVERSION REVISION 01	KN	
B	2002-05-28	EC B20086	MF	
C	2005-11-11	I05-0227	VIVEK	BKP
D	2006-08-09	I06-0145	VIVEK	BKP

LOADING PATTERN MATING SIDE

	POS 01				05				10				15				20				25
f	0	0	0	0	0	0	0	0	0	0	0				0	0	0	0	0	0	0	0	0	0	0
e	3	3	1	1	1	1	1	1	1	1	1				1	1	1	1	1	1	1	1	1	0	3
d	3	3	1	1	1	1	1	1	1	1	1				1	1	1	1	1	1	1	1	1	0	3
c	3	1	1	1	1	1	1	1	1	1	1				1	1	1	1	1	1	1	1	1	0	3
b	3	1	1	1	1	1	1	1	1	1	1				1	1	1	1	1	1	1	1	1	0	3
a	3	1	1	1	1	1	1	1	1	1	1				1	1	1	1	1	1	1	1	1	0	3
z	0	0	0	0	0	0	0	0	0	0	0				0	0	0	0	0	0	0	0	0	0	0

LOADED CONNECTOR ASSEMBLY
(FOR EXAMPLE)

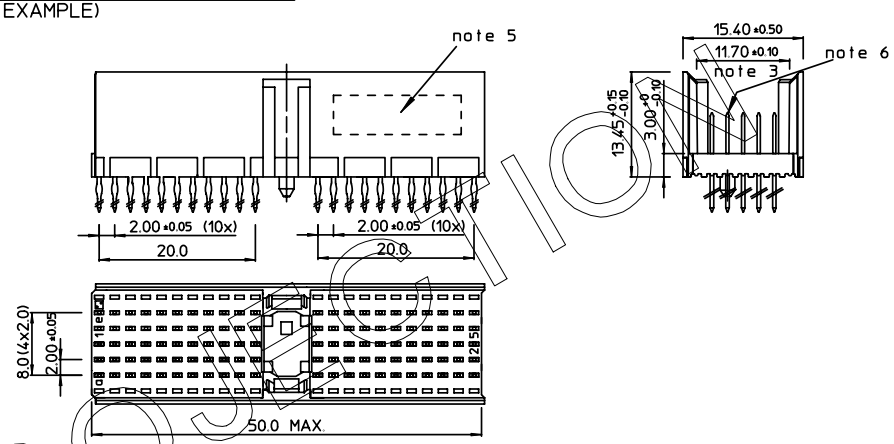

CONTACT OVERVIEW

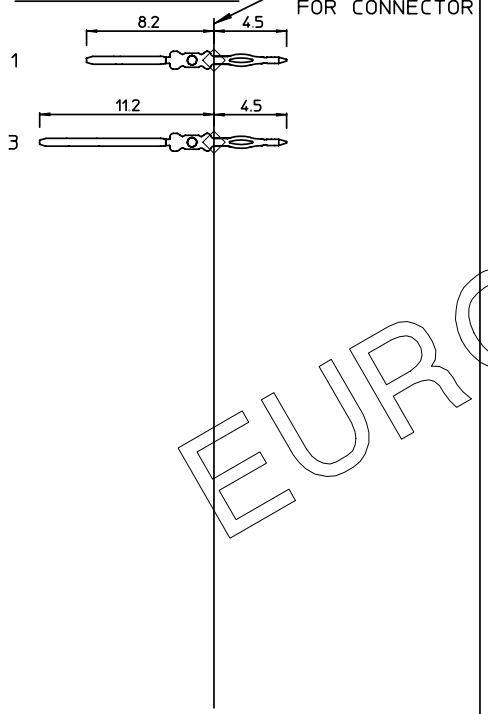

LAY-OUT P.C.B.-HOLE

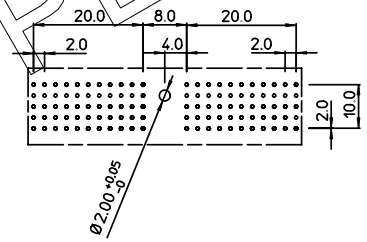

HM2P07PCN240 - -

LEAD FREE INDICATOR : LF = LEAD FREE
(DIGIT 15 & 16)

PLATING CODE (DIGIT 13 AND 14)
(REF DWG No. BS,C ,201844,003)

NOTES:

1. THIS PRODUCT IS CSA APPROVED.
2. THIS PRODUCT IS UL RECOGNIZED.
3. MEASURED AT THE BOTTOM.
4. MATERIAL CONTACT: PHOSPHORBRONZE
   HOUSING: CREAM WHITE GLASSFILLED POLYESTER UL-94V0
5. CONNECTOR PRINTED WITH P/N AND DATE CODE.
6. FOR ACTUAL CONTACT LOADINGS, SEE LOADING PATTERN MATING SIDE.
7. SHAPE OF CONNECTOR HOUSING CAN ALTER DEPENDING ON PRODUCTION LOCATION.
8. THE PRODUCT (LF) MEETS EUROPEAN UNION DIRECTIVES AND OTHER COUNTRY REGULATIONS AS DESCRIBED IN GS-22-008
9. FOR RECOMMENDED PTH DIMENSIONS REFER DRAWING : BS,A ,201572,001

1DEC ±0,2
2DEC ±0,1
ANGLES ±1°

WE RESERVE THE RIGHT TO CHANGE DIMENSIONS OR REQUIREMENTS WITHOUT PRIOR NOTICE.

ALL DIMENSIONS IN MM

APPR.	DATE	SIGN.
DRAFT	2000-12-04	M.Fret
CHECKED		
PROD. MGR.		
PR.ENG.MGR.		
PR.MGT.MGR.		

REFERENCES

MPACS 5+2R STR HDR SG PF ASSY TYPE A

CAT. No. HM2P07PCN240----

FCI www.fciconnect.com

SCALE

BS,C ,202788,064 — DRAWING No. — CUSTOMER DRAWING

D — REVISION

THIS IS OUR EXCLUSIVE PROPERTY. IT IS NOT TO BE COPIED, REPRINTED OR DISCLOSED TO A THIRD PARTY, NOR USED FOR MANUFACTURING WITHOUT OUR WRITTEN CONSENT, AND HAS TO BE RETURNED TO US IN CASE OF NO USAGE

DIT IS ONZE EIGENDOM EN MAG NOCH NAGEMAAKT, HERDRUKT, OVERGEMAAKT AAN DERDEN, NOCH VOOR FABRIKATIE GEBRUIKT WORDEN, ZONDER ONZE SCHRIFTELIJKE TOELATING. BIJ NIET GEBRUIK IS TERUGZENDING VERPLICHT.

EUROPEAN PROPERTY