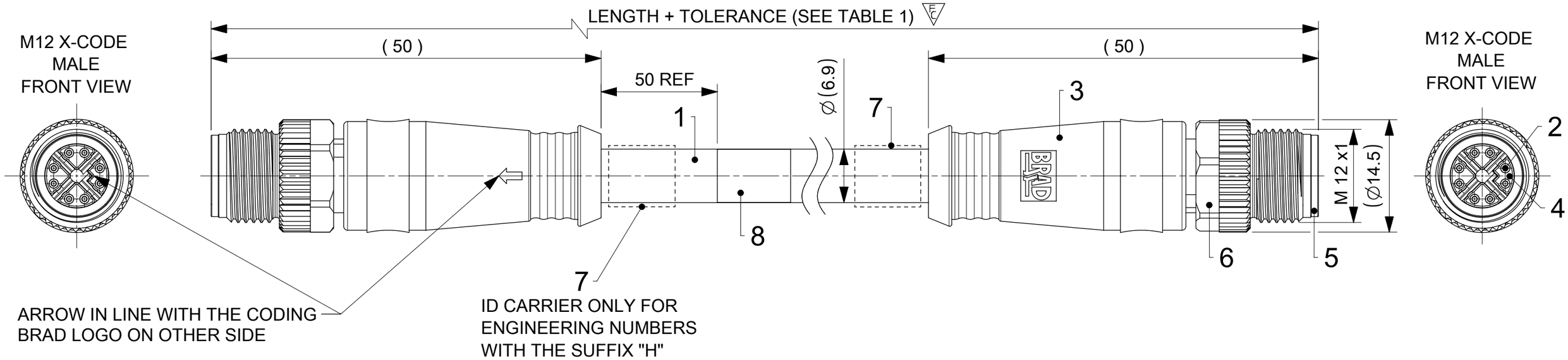

WIRING DIAGRAM

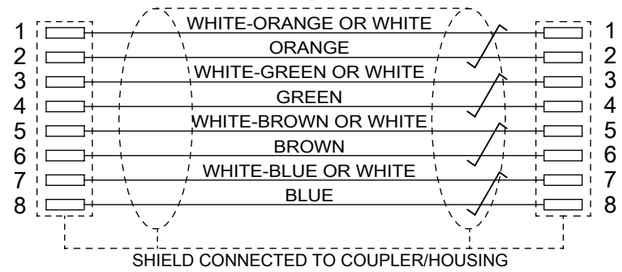

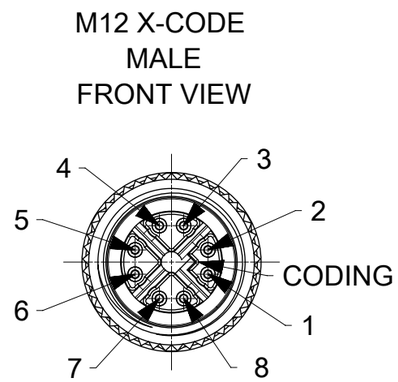

NOTES:
VOLTAGE RATING: 48 V
CURRENT RATING: 0.5 A
TEMPERATURE RATING:
STATIC: -40 °C TO 80 °C
DYNAMIC: -20 °C TO 80 °C
IP RATING: IP 67 (IN MATED AND LOCKED CONDITION)
TRANSMISSION CHARACTERISTICS ACCORDING TO ISO/IEC 11801 CLASS EA CHANNEL,
WITH INSERTION LOSS BEING IGNORED FOR CABLE LENGTHS ∠ 1 m OR ∠ 65 m
PACKAGING: CORDSETS ARE PACKED IN A POLYBAG

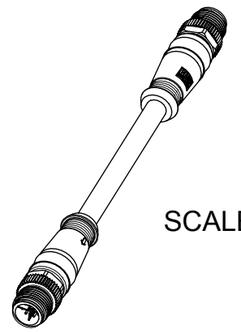

SCALE 1:2

BILL OF MATERIAL

ITEM	QTY	DESCRIPTION	MATERIAL	FINISH/COLOR
1	1	CABLE	PUR	GREEN
2	16	CONTACT 6 MALE	BRASS	Au OVER Ni
3	-	MOLDING MATERIAL	TPU	BLACK
4	2	INSERT M12 CAT6A MALE 8P	PA6	BLACK
5	2	SHELL M12 CAT6A	ZINC DIE-CAST	Ni PLATED
6	2	NUT M12 MALE	BRASS	Ni PLATED
7	2	I/D CARRIER	PVC	TRANSPARENT
8	1	LABEL 2.0X1.75	VINYL	YELLOW

DOCUMENT STATUS	P1	RELEASE DATE	2022/01/25 10:26:18

FUNCTIONAL SYMBOLS: EA = 0, EC = 1, EP = 0
DIVISIONAL SYMBOLS

THIS DRAWING CONTAINS INFORMATION THAT IS PROPRIETARY TO MOLEX ELECTRONIC TECHNOLOGIES, LLC AND SHOULD NOT BE USED WITHOUT WRITTEN PERMISSION

DIMENSION UNITS	SCALE
mm	2:1

GENERAL TOLERANCES (UNLESS SPECIFIED)

ANGULAR TOL	± 1.0 °
4 PLACES	±
3 PLACES	±
2 PLACES	± 0.05
1 PLACE	± 0.3
0 PLACES	± 0.5

DRAFT WHERE APPLICABLE MUST REMAIN WITHIN DIMENSIONS

CURRENT REV DESC: NOTE CHANGED

EC NO: 692351
DRWN: HDUERRWANG 2022/01/17
CHK'D: RSILLER 2022/01/25
APPR: RSILLER 2022/01/25

INITIAL REVISION:
DRWN: FGAIK 2017/06/19
APPR: BBRAUCH 2017/06/21

THIRD ANGLE PROJECTION | DRAWING: A3-SIZE | SERIES: 120341

molex

CSE M12 CAT6A 8P XC MA STR PUR XM DE

PRODUCT CUSTOMER DRAWING

DOCUMENT NUMBER	DOC TYPE	DOC PART	REVISION
1203410300	PSD	000	A8

MATERIAL NUMBER	CUSTOMER	SHEET NUMBER
SEE TABLE 1	GENERAL MARKET	1 OF 2

FORMAT: master_Sealed-A3
REVISION: J
DATE: 2020/01/14

TABLE 1

MOLEX PN	ENGINEERING NO.	DESCRIPTION	LENGTH [mm]
1203410312	E22E06020C250	M12 CAT6A M/M ST/ST PUR GREEN 0.25M	250
1203410300	E22E06020M005	M12 CAT6A M/M ST/ST PUR GREEN 0.5M	500
1203410301	E22E06020M010	M12 CAT6A M/M ST/ST PUR GREEN 1M	1000
1203410313	E22E06020M015	M12 CAT6A M/M ST/ST PUR GREEN 1.5M	1500
1203410302	E22E06020M020	M12 CAT6A M/M ST/ST PUR GREEN 2M	2000
1203410303	E22E06020M030	M12 CAT6A M/M ST/ST PUR GREEN 3M	3000
1203410304	E22E06020M040	M12 CAT6A M/M ST/ST PUR GREEN 4M	4000
1203410305	E22E06020M050	M12 CAT6A M/M ST/ST PUR GREEN 5M	5000
1203410859	E22E06020M070	M12 CAT6A M/M ST/ST PUR GREEN 7M	7000
1203410374	E22E06020M080	M12 CAT6A M/M ST/ST PUR GREEN 8M	8000
1203410306	E22E06020M100	M12 CAT6A M/M ST/ST PUR GREEN 10M	10000
1203410375	E22E06020M120	M12 CAT6A M/M ST/ST PUR GREEN 12M	12000
1203410307	E22E06020M150	M12 CAT6A M/M ST/ST PUR GREEN 15M	15000
1203410376	E22E06020M180	M12 CAT6A M/M ST/ST PUR GREEN 18M	18000
1203410308	E22E06020M200	M12 CAT6A M/M ST/ST PUR GREEN 20M	20000
1203410377	E22E06020M220	M12 CAT6A M/M ST/ST PUR GREEN 22M	22000
1203410311	E22E06020M250	M12 CAT6A M/M ST/ST PUR GREEN 25M	25000
1203410309	E22E06020M300	M12 CAT6A M/M ST/ST PUR GREEN 30M	30000
1203410823	E22E06020M340	M12 CAT6A M/M ST/ST PUR GREEN 34M	34000
1203410378	E22E06020M350	M12 CAT6A M/M ST/ST PUR GREEN 35M	35000
1203410310	E22E06020M400	M12 CAT6A M/M ST/ST PUR GREEN 40M	40000
1203410379	E22E06020M450	M12 CAT6A M/M ST/ST PUR GREEN 45M	45000
1203410371	E22E06020M500	M12 CAT6A M/M ST/ST PUR GREEN 50M	50000
1203410380	E22E06020M550	M12 CAT6A M/M ST/ST PUR GREEN 55M	55000
1203410372	E22E06020M600	M12 CAT6A M/M ST/ST PUR GREEN 60M	60000
1203410381	E22E06020M650	M12 CAT6A M/M ST/ST PUR GREEN 65M	65000
1203410373	E22E06020M700	M12 CAT6A M/M ST/ST PUR GREEN 70M	70000
1203410847	E22E06020M800	M12 CAT6A M/M ST/ST PUR GREEN 80M	80000
WITH ID CARRIER			
1203410385	E22E06020M005H	M12 CAT6A M/M ST/ST PUR GREEN 0.5M-ID	500
1203410386	E22E06020M010H	M12 CAT6A M/M ST/ST PUR GREEN 1M-ID	1000
1203410396	E22E06020M015H	M12 CAT6A M/M ST/ST PUR GREEN 1.5M-ID	1500
1203410387	E22E06020M020H	M12 CAT6A M/M ST/ST PUR GREEN 2M-ID	2000
1203410388	E22E06020M030H	M12 CAT6A M/M ST/ST PUR GREEN 3M-ID	3000
1203410389	E22E06020M040H	M12 CAT6A M/M ST/ST PUR GREEN 4M-ID	4000
1203410390	E22E06020M050H	M12 CAT6A M/M ST/ST PUR GREEN 5M-ID	5000
1203410391	E22E06020M100H	M12 CAT6A M/M ST/ST PUR GREEN 10M-ID	10000
1203410392	E22E06020M150H	M12 CAT6A M/M ST/ST PUR GREEN 15M-ID	15000
1203410393	E22E06020M200H	M12 CAT6A M/M ST/ST PUR GREEN 20M-ID	20000
1203410922	E22E06020M250H	M12 CAT6A M/M ST/ST PUR GREEN 25M-ID	25000
1203410394	E22E06020M300H	M12 CAT6A M/M ST/ST PUR GREEN 30M-ID	30000
1203410923	E22E06020M350H	M12 CAT6A M/M ST/ST PUR GREEN 35M-ID	35000
1203410395	E22E06020M400H	M12 CAT6A M/M ST/ST PUR GREEN 40M-ID	40000
1203410984	E22E06020M450H	M12 CAT6A M/M ST/ST PUR GREEN 45M-ID	45000
1203410397	E22E06020M500H	M12 CAT6A M/M ST/ST PUR GREEN 50M-ID	50000
1203410985	E22E06020M550H	M12 CAT6A M/M ST/ST PUR GREEN 55M-ID	55000
1203410398	E22E06020M600H	M12 CAT6A M/M ST/ST PUR GREEN 60M-ID	60000
1203410986	E22E06020M650H	M12 CAT6A M/M ST/ST PUR GREEN 65M-ID	65000
1203410399	E22E06020M700H	M12 CAT6A M/M ST/ST PUR GREEN 70M-ID	70000
1203410987	E22E06020M750H	M12 CAT6A M/M ST/ST PUR GREEN 75M-ID	75000
1203410988	E22E06020M850H	M12 CAT6A M/M ST/ST PUR GREEN 85M-ID	85000

CABLE LENGTH TOLERANCES

LENGTH	TOLERANCE
0 m - 1 m	+40 mm
>1 m - 5 m	+60 mm
>5 m - 10 m	+80 mm
>10 m - 20 m	+140 mm
>20 m - 30 m	+160 mm
>30 m	+1% length

THIS DRAWING CONTAINS INFORMATION THAT IS PROPRIETARY TO MOLEX ELECTRONIC TECHNOLOGIES, LLC AND SHOULD NOT BE USED WITHOUT WRITTEN PERMISSION

FUNCTIONAL SYMBOLS: F/A = 0, F/C = 0, F/P = 0

DIVISIONAL SYMBOLS

DIMENSION UNITS: mm
SCALE: 1:1

GENERAL TOLERANCES (UNLESS SPECIFIED)

ANGULAR TOL	±	1.0 °
4 PLACES	±	
3 PLACES	±	
2 PLACES	±	0.05
1 PLACE	±	0.3
0 PLACES	±	0.5

DRAFT WHERE APPLICABLE MUST REMAIN WITHIN DIMENSIONS

CURRENT REV DESC: NOTE CHANGED

EC NO: 692351
DRWN: HDUERRWANG 2022/01/17
CHK'D: RSILLER 2022/01/25
APPR: RSILLER 2022/01/25

INITIAL REVISION:
DRWN: FGAIK 2017/06/19
APPR: BBRAUCH 2017/06/21

THIRD ANGLE PROJECTION | DRAWING: A3-SIZE | SERIES: 120341

molex

CSE M12 CAT6A 8P XC MA STR PUR XM DE

PRODUCT CUSTOMER DRAWING

DOCUMENT NUMBER	DOC TYPE	DOC PART	REVISION
1203410300	PSD	000	A8

MATERIAL NUMBER	CUSTOMER	SHEET NUMBER
SEE TABLE 1	GENERAL MARKET	2 OF 2

DOCUMENT STATUS	P1	RELEASE DATE	2022/01/25 10:26:18

FORMAT: master-landscape-A3
REVISION: J
DATE: 2020/01/14