THIS COPY IS PROVIDED ON A RESTRICTED BASIS AND IS NOT TO BE USED IN ANY WAY DETRIMENTAL TO THE INTERESTS OF PANDUIT CORP.

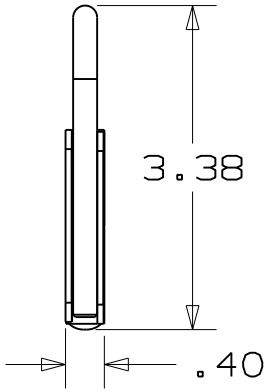

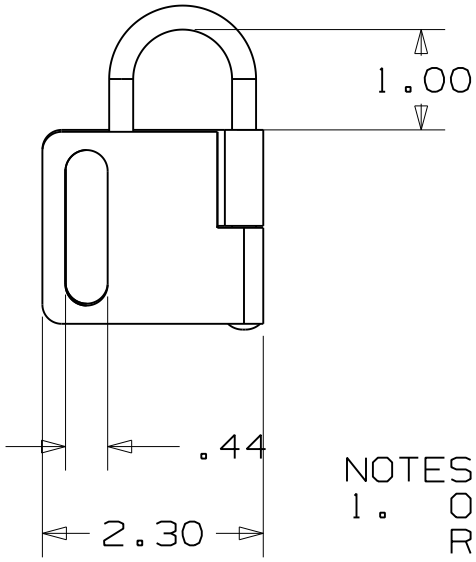

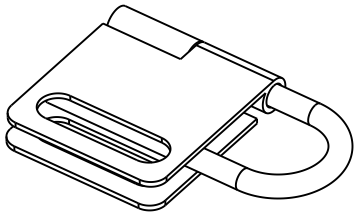

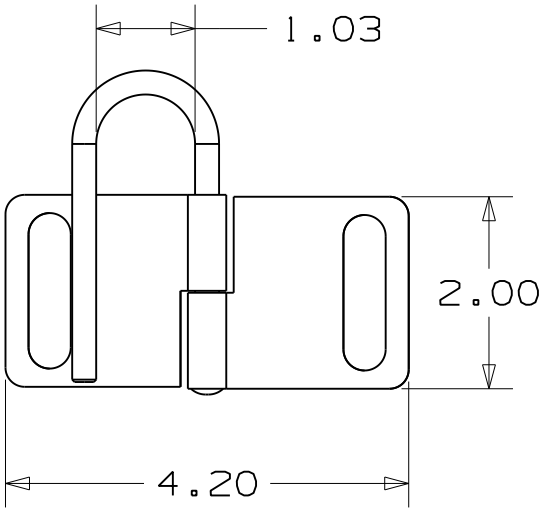

NOTES:

1. OPERATIONAL TEMPERATURE RANGE: -40°F (-40°C) TO 140°F (60°C)
2. STORAGE TEMPERATURE RANGE: -40°F (-40°C) TO 250°F (120°C)
3. CAUTION: TOUCHING METAL AT EXTREME TEMPERATURES CAN CAUSE BURNS AND OTHER INJURIES

REV	DATE	BY	CHK	DESCRIPTION	ECN - R	CUST	SUP
0	1/27/11	BSW		DRAWING RELEASE	6291		

CAD FILENAME/LAYERS: 140019AA_DC_C10891/00A

PANDUIT CORP. TINLEY PARK, ILLINOIS

PSL-HD1
CUSTOMER DRAWING

UNLESS OTHERWISE SPECIFIED, DIMENSIONAL TOLERANCES ARE:
(.X) ± .1 (.XXX) ± .025
(.XX) ± .05 ANGLES ± 5°

UNLESS OTHERWISE SPECIFIED, ALL DIMENSIONS ARE GIVEN IN INCHES, THIRD ANGLE PROJECTION.

DRAWN BY: BSW
DATE: 01/27/11
CHK'D:
MAT'L: STEEL
SCALE: 1:2
DRAWING NO.: C10891
DWG SIZE: A