SPECIFICATIONS		
PARAMETERS	VALUES	UNITS
RATED VOLTAGE	12	Vdc
OPERATING VOLTAGE RANGE	10 ~ 48	Vdc
RATED CURRENT (MAX)	3	mA
MINIMUM SPL @ 10 CM	86	dBA
RESONANT FREQUENCY	2,800 ± 500	Hz
TONE OR PULSE RATE	CONTINUOUS	0 pulse /sec
OPERATING TEMPERATURE	-30 ~ +85	°C
STORAGE TEMPERATURE	-40 ~ +85	°C
HOUSING MATERIAL	NYLON	-
TERMINAL MATERIAL	Sn PLATED BRONZE	-
WEIGHT	40	grams

THIS DOCUMENT CONTAINS DATA PROPRIETARY TO PROJECTS UNLIMITED, INC. ANY USE OR REPRODUCTION, IN ANY FORM, WITHOUT PRIOR WRITTEN PERMISSION OF PROJECTS UNLIMITED, INC. IS PROHIBITED.
©2003, Projects Unlimited Inc.

REVISION HISTORY			
LTR	DESCRIPTION	DATE	APPROVED
-	RELEASED FROM ENGINEERING	6/21/2006	
A	REVISED TO INVENTOR 3-D DRAWING TEMPLATE	2/28/2008	B.R.

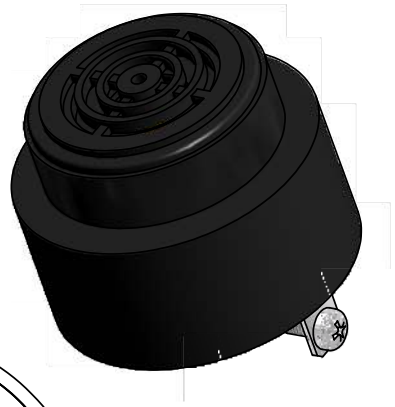

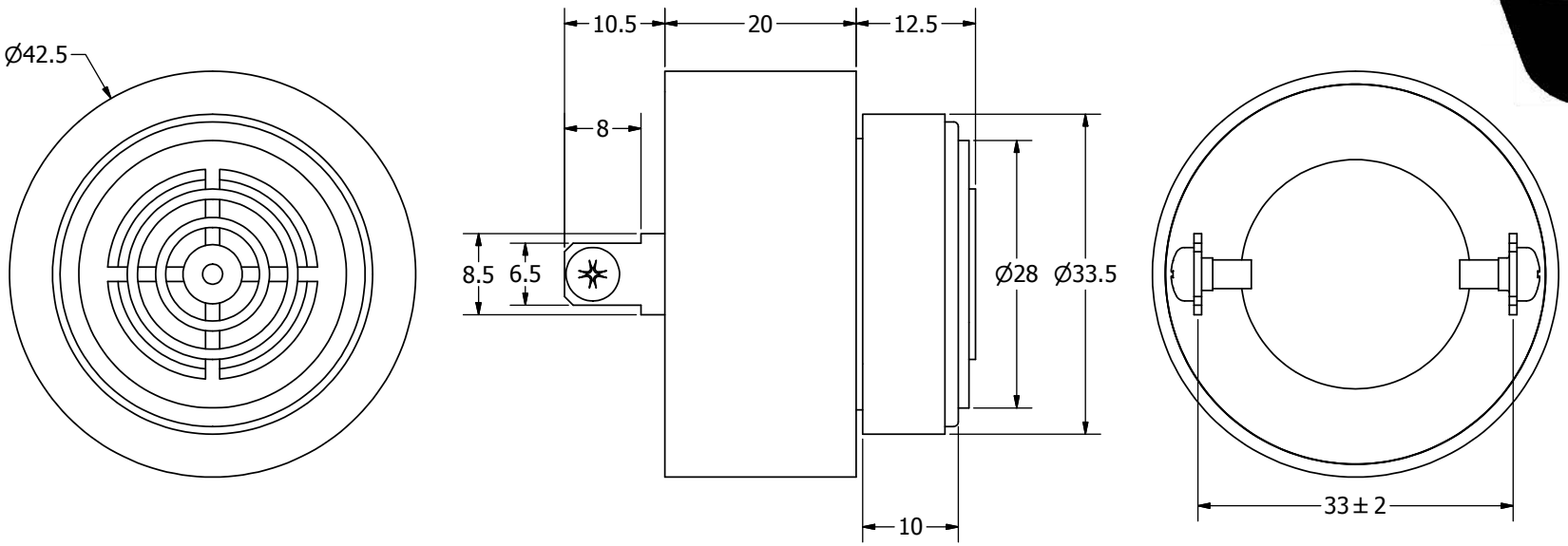

NOTES:

1. ALL DIMENSIONS ARE IN MILLIMETERS.
2. SPECIFICATIONS SUBJECT TO CHANGE OR WITHDRAWL WITHOUT NOTICE.
3. THIS PART IS RoHS 2002/95/EC COMPLIANT.

THIS PART IS UL RECOGNIZED IN THE US AND CANADA

UNLESS OTHERWISE SPECIFIED:
DIMENSIONS ARE IN MILLIMETERS,
TOLERANCES ARE ±0.5 AND ANGLES ARE ±3°.

SIZE A3

AI-4228-P-C48-R.idw

Designed by	Date	Checked by	Date	Approved by	Date	Drawn Date
J.D.	6/21/2006	E.P.	6/21/2006	B.R.	6/21/2006	2/28/2008

pui audio
A Division of Projects Unlimited

AI-4228-P-C48-R

UL Indicator

Edition: -
Sheet: 1 / 1