PART NUMBER CODING

_ _C _ _ S_ _N - M_ _ _

MATERIAL (INSULATOR / CONTACT)
(SEE MATERIAL TABLE)

PLATING
ALL PLATINGS HAVE .000050" MIN NICKEL UNDERPLATE

CONTACT SURFACE	TERMINATION
B = .000010" GOLD	.000100" PURE TIN, MATTE
C = .000030" GOLD	.000100" PURE TIN, MATTE
G = .000010" GOLD	.000005" GOLD
E = .000100" PURE TIN, MATTE	
S = .000010" GOLD OVERALL	
M = .000030" GOLD	.000010" GOLD OVERALL

TERMINATION TYPE

NUMBER OF POSITIONS PER ROW
(01 THRU 36)

MODIFICATION
OMIT = STANDARD, EXAMPLE: 'RMC22SAAN'
M500 = BROWN PPS (MATERIAL CODE 'R' ONLY)
M594 = WHITE PA9T (MATERIAL CODE 'G' ONLY)

REVISIONS

REV.	ECO. NO	DESCRIPTION	DATE	BY
M	3749	UPGRADE PBT ON 36 POSITION, UPDATE NOTCH ON TOP VIEW	1/12/2018	JH

MATERIAL TABLE

LETTER CODE	INSULATOR / CONTACT	OPERATING TEMP.	PROCESSING TEMP.	MODIFICATION NUMBER
P	**BLACK PBT / PHOSPHOR BRONZE	-65°C TO +125°C	WAVE/MANUAL SOLDERING	OMIT
G	BLACK PA9T / PHOSPHOR BRONZE	-65°C TO +150°C	260°C MAX FOR 10 SECONDS	OMIT
G	WHITE PA9T / PHOSPHOR BRONZE	-65°C TO +150°C	260°C MAX FOR 10 SECONDS	M594
*R	GREEN PPS / PHOSPHOR BRONZE**	-65°C TO +200°C	260°C MAX FOR 20 SECONDS	OMIT
*R	BROWN PPS / PHOSPHOR BRONZE**	-65°C TO +200°C	260°C MAX FOR 20 SECONDS	M500
*Q	TAN PEEK / PHOSPHOR BRONZE**	-65°C TO +250°C	260°C MAX FOR 20 SECONDS	OMIT

* AVAILABLE WITH OVERALL GOLD PLATING ('M') ONLY
** OR EQUIVALENT

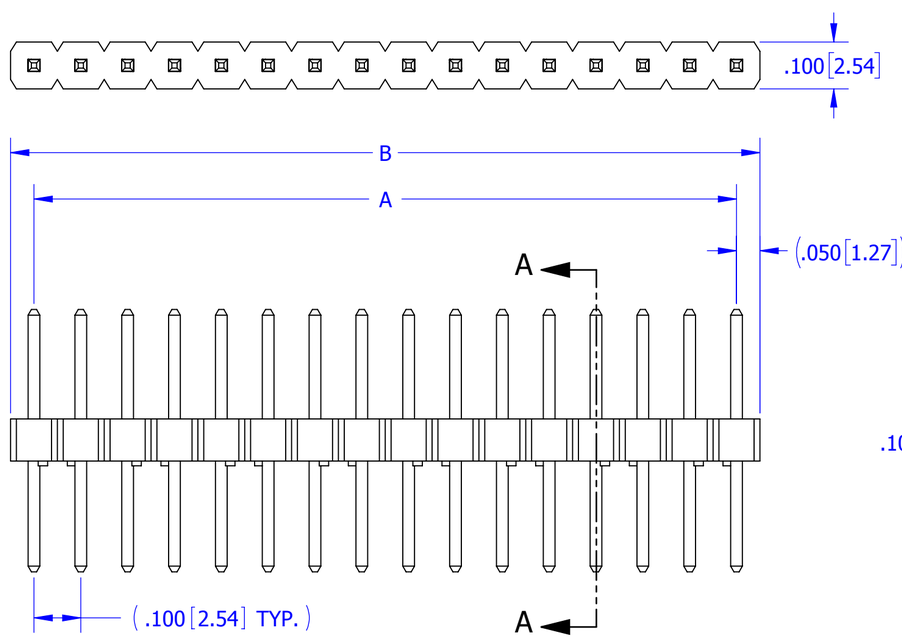

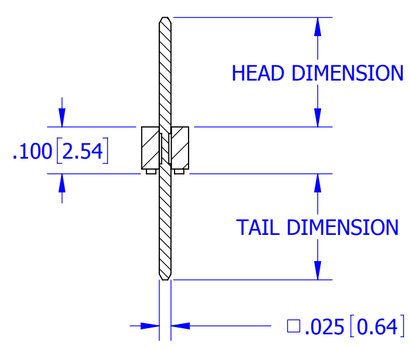

SECTION A-A

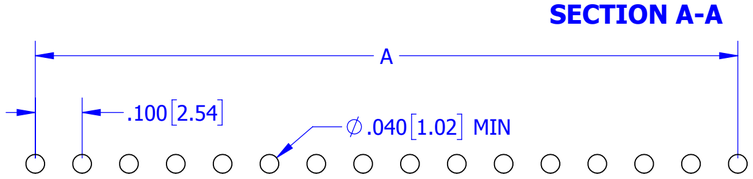

PCB LAYOUT RECOMMENDED

TERMINATION TYPE STRAIGHT		
CODE	HEAD DIMENSION ±.008 [0.20]	TAIL DIMENSION ±.010 [0.25]
AA	.230[5.84]	.120[3.05]
AB	.230[5.84]	.230[5.84]
AC	.230[5.84]	.320[8.13]
AD	.230[5.84]	.420[10.67]
AE	.230[5.84]	.520[13.21]
AF	.230[5.84]	.620[15.75]
AG	.230[5.84]	.720[18.29]
AH	.230[5.84]	.820[20.83]
AI	.230[5.84]	.900[22.86]
AJ	.230[5.84]	1.000[25.40]
AK	.230[5.84]	.035[0.89]
FA	.318[8.08]	.120[3.05]
FB	.318[8.08]	.220[5.59]
FC	.318[8.08]	.320[8.13]
FD	.318[8.08]	.420[10.67]
FE	.318[8.08]	.520[13.21]
FF	.318[8.08]	.620[15.75]
FG	.318[8.08]	.710[18.03]
FH	.318[8.08]	.810[20.57]
FI	.318[8.08]	.910[23.11]
FJ	.318[8.08]	.050[1.27]
ZA	.120[3.05]	.120[3.05]
ZB	.120[3.05]	.095[2.41]
ZC	.120[3.05]	.260[6.60]
ZD	.120[3.05]	.610[15.49]
ZI	.520[13.21]	.110[2.79]
ZJ	.720[18.29]	.110[2.79]
ZO	.820[20.83]	.110[2.79]
ZQ	1.020[25.91]	.110[2.79]
ZR	1.220[30.99]	.110[2.79]

PART NUMBER	A INCH ±.008	A MM ±0.20	B INCH ±.020	B MM ±0.51
_ _ C01S_ _N	0.000	0.00	0.100	2.54
_ _ C02S_ _N	0.100	2.54	0.200	5.08
_ _ C03S_ _N	0.200	5.08	0.300	7.62
_ _ C04S_ _N	0.300	7.62	0.400	10.16
_ _ C05S_ _N	0.400	10.16	0.500	12.70
_ _ C06S_ _N	0.500	12.70	0.600	15.24
_ _ C07S_ _N	0.600	15.24	0.700	17.78
_ _ C08S_ _N	0.700	17.78	0.800	20.32
_ _ C09S_ _N	0.800	20.32	0.900	22.86
_ _ C10S_ _N	0.900	22.86	1.000	25.40
_ _ C11S_ _N	1.000	25.40	1.100	27.94
_ _ C12S_ _N	1.100	27.94	1.200	30.48
_ _ C13S_ _N	1.200	30.48	1.300	33.02
_ _ C14S_ _N	1.300	33.02	1.400	35.56
_ _ C15S_ _N	1.400	35.56	1.500	38.10
_ _ C16S_ _N	1.500	38.10	1.600	40.64
_ _ C17S_ _N	1.600	40.64	1.700	43.18
_ _ C18S_ _N	1.700	43.18	1.800	45.72
_ _ C19S_ _N	1.800	45.72	1.900	48.26
_ _ C20S_ _N	1.900	48.26	2.000	50.80
_ _ C21S_ _N	2.000	50.80	2.100	53.34
_ _ C22S_ _N	2.100	53.34	2.200	55.88
_ _ C23S_ _N	2.200	55.88	2.300	58.42
_ _ C24S_ _N	2.300	58.42	2.400	60.96
_ _ C25S_ _N	2.400	60.96	2.500	63.50
_ _ C26S_ _N	2.500	63.50	2.600	66.04
_ _ C27S_ _N	2.600	66.04	2.700	68.58
_ _ C28S_ _N	2.700	68.58	2.800	71.12
_ _ C29S_ _N	2.800	71.12	2.900	73.66
_ _ C30S_ _N	2.900	73.66	3.000	76.20
_ _ C31S_ _N	3.000	76.20	3.100	78.74
_ _ C32S_ _N	3.100	78.74	3.200	81.28
_ _ C33S_ _N	3.200	81.28	3.300	83.82
_ _ C34S_ _N	3.300	83.82	3.400	86.36
_ _ C35S_ _N	3.400	86.36	3.500	88.90
_ _ C36S_ _N	3.500	88.90	3.600	91.44

CUSTOMER COPY

NOTES:
1. INSULATOR MATERIAL: SEE PART NUMBER CODING
2. CONTACT MATERIAL: SEE PART NUMBER CODING
3. PLATING: SEE PART NUMBER CODING
4. UL FLAMMABILITY RATING: 94V-0
5. DIELECTRIC WITHSTANDING VOLTAGE: 1800 VAC
6. CURRENT RATING: 3 AMPS
7. CONTACT RESISTANCE: 30 MILLIOHMS MAX.
8. INSULATION RESISTANCE: 5000 MEGOHMS MIN.

RoHS COMPLIANT

UNLESS OTHERWISE SPECIFIED: DIMENSIONS ARE IN INCHES [MM]

TOLERANCES:

ANGULAR: ± 1°

DECIMALS
.XX=± .02 [.5]
.XXX=± .005 [.13]
.XXXX=± .0005 [.013]

DRAWN	DATE	NAME
	9/9/2011	JH

THE INFORMATION HEREIN CONTAINS PROPRIETARY INFORMATION OF SULLINS ELECTRONICS AND IS NOT TO BE REPRODUCED, USED OR DISCLOSED TO OTHERS FOR ANY PURPOSE EXCEPT AS SPECIFICALLY AUTHORIZED IN WRITING BY AN OFFICER OF SULLINS ELECTRONICS.

SULLINS CONNECTOR SOLUTIONS

TITLE .100" CC, HEADER, STRAIGHT

PART NUMBER _ _C_ _S_ _N - (M500,M594)

SIZE	CAGE CODE	DWG. NO.	REV
C	54453	C10436	M

SCALE: 4:1 SHEET 1 OF 1

FILE NAME: C10436, _ _C_ _S{AA,AB,AC,AD,AE,AF,AG,AH,AI,AJ,AK,FA,FB,FC,FD,FE,FF,FG,FH,FI,FJ,ZA,ZB,ZC,ZD,ZI,ZJ,ZO,ZQ,ZR}N-{OMIT,M500,M594}