© 2020 TE Connectivity. All Rights Reserved.

REVISIONS					
P	LTR	DESCRIPTION	DATE	DWN	APVD
	S10	REVISED PER ECO-09-009758	23APR2009	DLD	DCM
	S11	REVISED PER ECO-09-028550	29DEC2009	DLD	DCM
	S12	REVISED PER ECO-20-012739	18SEP2020	AP	CM

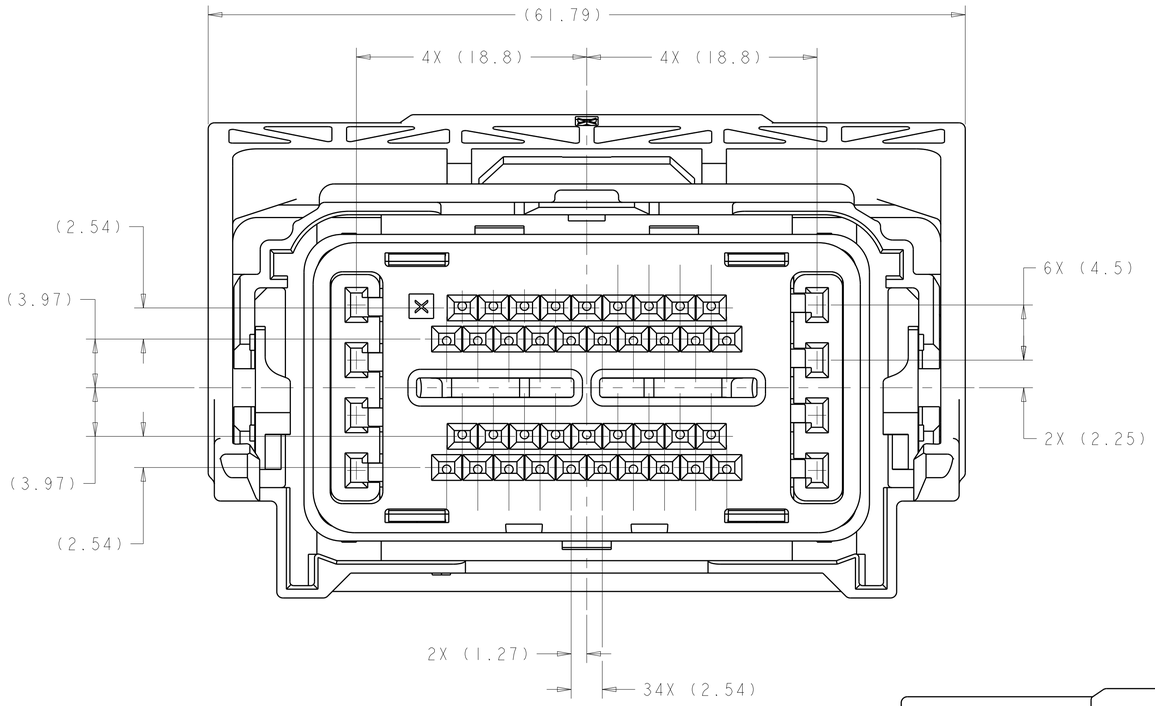

KEYING OPTION "A"
1438082-1 △3

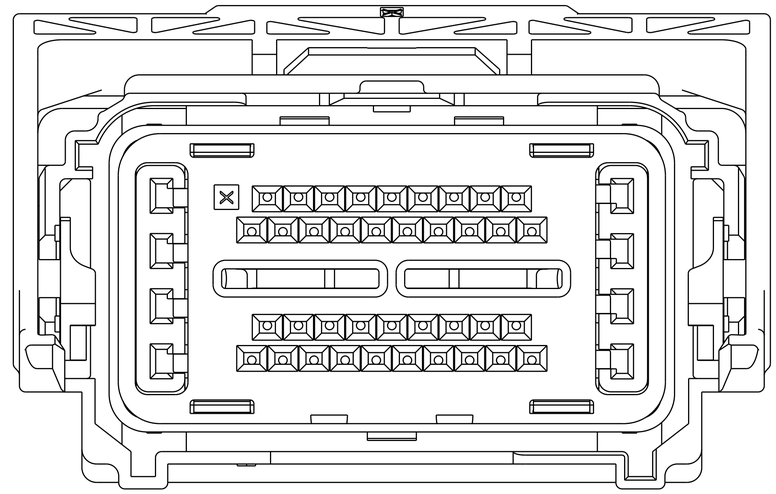

KEYING OPTION "B"
1438082-2 △3

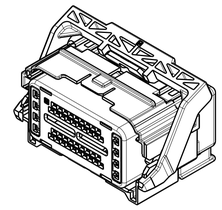

SCALE 1:1

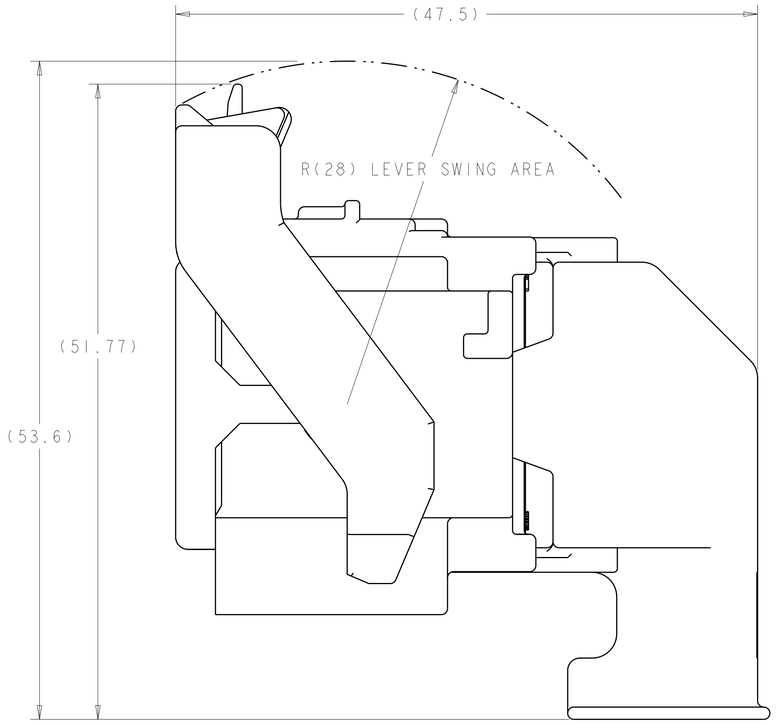

SHOWN WITH CAM LEVER AND SPACER
IN LOADED POSITION WITH
OPTIONAL WIRESHIELD

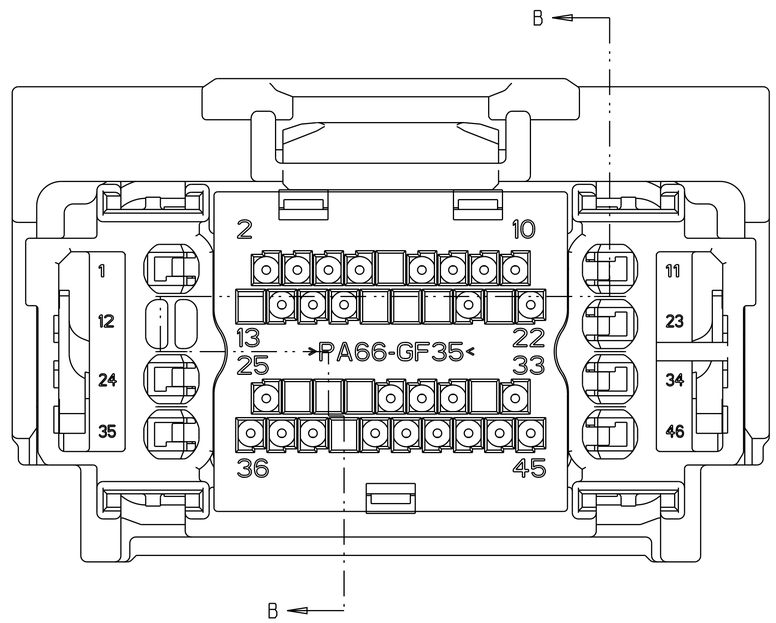

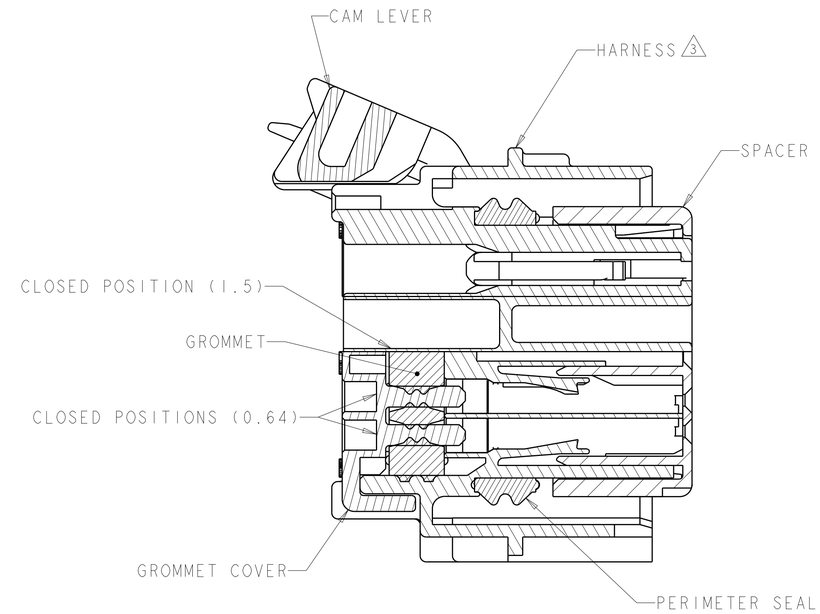

SECTION B-B

△1 MATERIAL:
HARNESS - 35% GLASS FILLED PA66, BLACK
ALT MAT'L: HARNESS - 30% GLASS FILLED sPS, BLACK
SPACER - 40% GLASS FILLED PPS+PA66, RED
ALT MAT'L: 30% GLASS FILLED sPS, RED
ALT MAT'L: 35% GLASS FILLED PA66, RED
COVER - 35% GLASS FILLED PA66, BLACK
ALT MAT'L: COVER - 30% GLASS FILLED LCP, BLACK
CAM LEVER - 35% GLASS FILLED NYLON, GRAY
GROMMET - SILICONE, BROWN
PERIMETER SEAL - SILICONE, GREEN

2. CAM LEVER AND SPACER ARE SHIPPED IN PRE-LATCH POSITION.

△3 SEE PINOUT CHART ON SHEETS 2, 3 AND 4 FOR CLOSED CIRCUIT CONFIGURATIONS.

△4 CAVITIES WITH A NUMERIC SYMBOL INDICATES CLOSED TERMINAL LOCATIONS.
BLANK CAVITIES INDICATE OPEN TERMINAL HOLE LOCATIONS.

△3 SEE PINOUT CHARTS

PART NUMBER

THIS DRAWING IS A CONTROLLED DOCUMENT.

DIMENSIONS: mm

TOLERANCES UNLESS OTHERWISE SPECIFIED:
0 PLC ±-
1 PLC ±0.3
2 PLC ±0.10
3 PLC ±-
4 PLC ±-
ANGLES ±3°

MATERIAL: SEE TABLE
FINISH: SEE TABLE

DWN R. VESTAL 01AUG2003
CHK D. STRAUSSER 01AUG2003
APVD D. STRAUSSER 01AUG2003
PRODUCT SPEC -
APPLICATION SPEC -
WEIGHT -

TE Connectivity

NAME 46 WAY PCM CONNECTOR HARNESS ASSEMBLY

SIZE A1 | CAGE CODE 00779 | DRAWING NO C-1438082 | RESTRICTED TO

CUSTOMER DRAWING | SCALE 4:1 | SHEET 1 OF 5 | REV S12

4805 (3/13)

© 2020 TE Connectivity. All Rights Reserved.

REVISIONS					
P	LTR	DESCRIPTION	DATE	DWN	APVD
	-	SEE SHEET 1	-	-	-

46	45	44	43	42	41	40	39	38	37	36	35	34	33	32	31	30	29	28	27	26	25	24	23	22	21	20	19	18	17	16	15	14	13	12	11	10	9	8	7	6	5	4	3	2	1	PART NUMBER	FORD PART NUMBER	
	45		43				39		37	36	35				31							24						18	17	16		14	13	12			9		7	6				2	1	9-1438082-7	2LIT-14A464-SD-051	OBSOLETE
				42																						20		18			15	14			11	10		8	7			4	3	2	1	9-1438082-6	2LIT-14A464-SD-050	OBSOLETE
				42																						20		18							11	10									1	9-1438082-5	2LIT-14A464-SD-049	
				42																						20		18							11	10								2	1	9-1438082-4	2LIT-14A464-SD-048	
											35								27																												9-1438082-3	2LIT-14A464-SD-047	
	45		43							36	35			32	31							24			21		19	18	17	16		14		12					7	6						1	9-1438082-1	2LIT-14A464-SD-046	OBSOLETE
46															31																																9-1438082-0	2LIT-14A464-SD-045	OBSOLETE
															31							24								16							8					3	2		8-1438082-9	2LIT-14A464-SD-044	OBSOLETE
																			27																												8-1438082-8	2LIT-14A464-SD-043	
	45	44	43	42		40		38	37	36			33		31		29					24		22		20		18	17	16	15						9	8					3			8-1438082-7	2LIT-14A464-SD-042	
	45	44	43	42		40		38	37	36			33		31		29					24		22	21	20	19	18	17	16	15						9	8		6				2		8-1438082-6	2LIT-14A464-SD-041	
46															31																						9			6			3			8-1438082-5	2LIT-14A464-SD-040	OBSOLETE
			43	42			39		37																	20	19	18							11	10	9							2	1	8-1438082-4	2LIT-14A464-SD-039	OBSOLETE
			43												31		29											18																		8-1438082-3	2LIT-14A464-SD-038	OBSOLETE
	45	44	43	42		40		38	37	36			33		31		29					24		22	21	20		18	17	16	15						9	8						2		8-1438082-0	2LIT-14A464-SD-037	
	45		43							36	35				31							24								16		14		12					7	6				2	1	7-1438082-9	2LIT-14A464-SD-036	OBSOLETE
	45		43							36	35				31							24			21		19			16		14		12					7	6				2	1	7-1438082-8	2LIT-14A464-SD-035	OBSOLETE
			43	42			39	38	37					32				28									19	18	17	16						10	9									7-1438082-5	2LIT-14A464-SD-034	
	45	44	43	42		40		38	37	36			33		31		29					24		22	21	20		18	17	16	15						9	8		6				2		7-1438082-4	2LIT-14A464-SD-033	OBSOLETE
	45	44	43	42		40		38	37	36			33		31							24		22	21	20		18	17	16	15						9	8		6				2		7-1438082-3	2LIT-14A464-SD-032	
						40											29																				9									6-1438082-6	2LIT-14A464-SD-031	
																			27															12						6						6-1438082-3	2LIT-14A464-SD-030	OBSOLETE
																			27																					6		4				6-1438082-2	2LIT-14A464-SD-029	OBSOLETE
																			27																					6						6-1438082-1	2LIT-14A464-SD-028	
																	29	28			25				21			18		16										6	5					5-1438082-6	2LIT-14A464-SD-027	OBSOLETE
																	29	28			25				21					16										6	5					5-1438082-5	2LIT-14A464-SD-026	
																30	29								21			18		16											5					5-1438082-2	2LIT-14A464-SD-025	
			43	42			39		37																	20	19	18	17		15	14			11	10	9	8	7			4	3	2	1	5-1438082-0	2LIT-14A464-SD-024	
				42																											15	14			11	10	9	8	7			4	3		1	4-1438082-9	2LIT-14A464-SD-023	OBSOLETE
			43	42			39		37																	20	19	18	17						11	10	9							2	1	4-1438082-8	2LIT-14A464-SD-022	OBSOLETE
				42																															11	10	9								1	4-1438082-7	2LIT-14A464-SD-021	
			43	42			39		37														23			20	19	18	17						11	10	9							2		4-1438082-2	2LIT-14A464-SD-020	
	45		43							36	35				31							24						18	17	16		14		12					7	6				2	1	4-1438082-0	2LIT-14A464-SD-019	
			43	42			39		37														23			20	19	18	17		15	14			11	10	9	8	7			4	3	2		3-1438082-8	2LIT-14A464-SD-018	
				42																			23								15	14			11	10	9	8	7			4	3			3-1438082-7	2LIT-14A464-SD-017	
			43	42			39		37														23			20	19	18	17	16					11	10	9							2		3-1438082-6	2LIT-14A464-SD-016	
				42																			23												11	10	9									3-1438082-5	2LIT-14A464-SD-015	
	45		43				39		37	36	35				31							24			21		19	18	17	16		14	13	12			9		7	6				2	1	3-1438082-4	2LIT-14A464-SD-014	OBSOLETE
	45		43				39		37	36	35		33		31						25	24			21		19	18	17	16		14	13	12			9		7	6				2	1	3-1438082-3	2LIT-14A464-SD-013	
	45		43							36	35				31							24			21		19	18	17	16		14		12					7	6				2	1	3-1438082-2	2LIT-14A464-SD-012	
				42																											15	14	13			10	9	8	7			4	3			3-1438082-1	2LIT-14A464-SD-011	
			43	42			39		37																	20	19	18	17				13			10	9							2		3-1438082-0	2LIT-14A464-SD-010	
				42																													13			10	9									2-1438082-9	2LIT-14A464-SD-009	
			43	42			39		37																	20	19	18	17		15	14	13			10	9	8	7			4	3	2		2-1438082-5	2LIT-14A464-SD-008	
	45						39		37	36	35		33								25	24			21		19	18	17	16		14	13	12			9		7	6				2	1	2-1438082-3	2LIT-14A464-SD-007	
	45						39		37	36	35											24			21		19	18	17	16		14	13	12			9		7	6				2	1	2-1438082-2	2LIT-14A464-SD-006	
	45									36	35		33								25	24			21		19	18	17	16		14		12					7	6				2	1	1-1438082-9	2LIT-14A464-SD-005	
	45									36	35											24			21		19	18	17	16		14		12					7	6				2	1	1-1438082-8	2LIT-14A464-SD-004	
	45										35											24			21		19	18	17	16		14		12					7	6				2	1	1-1438082-1	2LIT-14A464-SD-003	
																	29	28							21					16											5					1438082-6	2LIT-14A464-SD-002	
											35											24			21		19	18	17					12						6					1	1438082-5	2LIT-14A464-SD-001	OBSOLETE
																																														1438082-1	2LIT-14A464-SD-000	
TERMINAL HOLE POSITION																																																

PIN-OUT CHART KEYING OPTION "A" 4

THIS DRAWING IS A CONTROLLED DOCUMENT.

DIMENSIONS: mm

TOLERANCES UNLESS OTHERWISE SPECIFIED:
0 PLC ±-
1 PLC ±0.3
2 PLC ±0.10
3 PLC ±-
4 PLC ±-
ANGLES ±3°

MATERIAL: SEE TABLE -

FINISH: SEE TABLE -

DWN R. VESTAL 01AUG2003
CHK D. STRAUSSER 01AUG2003
APVD D. STRAUSSER 01AUG2003

PRODUCT SPEC -

APPLICATION SPEC -

WEIGHT -

TE Connectivity

NAME 46 WAY PCM CONNECTOR HARNESS ASSEMBLY

SIZE A1 | CAGE CODE 00779 | DRAWING NO C-1438082 | RESTRICTED TO

CUSTOMER DRAWING

SCALE 4:1 | SHEET 2 OF 5 | REV S12

4805 (3/13)

© 2020 TE Connectivity. All Rights Reserved.

REVISIONS					
P	LTR	DESCRIPTION	DATE	DWN	APVD
	-	SEE SHEET 1	-	-	-

46	45	44	43	42	41	40	39	38	37	36	35	34	33	32	31	30	29	28	27	26	25	24	23	22	21	20	19	18	17	16	15	14	13	12	11	10	9	8	7	6	5	4	3	2	1	PART NUMBER	FORD PART NUMBER	
		44									35			32										22										12			9		7	6					1	6-1438735-7	2LIT-14A464-SD-086	
		~~44~~									~~35~~			~~32~~																				~~12~~			~~9~~		~~7~~	~~6~~					~~1~~	~~6-1438735-3~~	~~2LIT-14A464-SD-085~~	OBSOLETE
											35																																			6-1438735-2	2LIT-14A464-SD-084	
			43	42		40	39		37								29									20		18			15	14			11	10	9	8	7			4	3		1	6-1438735-1	2LIT-14A464-SD-083	
	~~45~~		~~43~~					~~38~~		~~36~~					~~31~~						~~25~~	~~24~~						~~18~~	~~17~~	~~16~~		~~14~~		~~12~~					~~7~~	~~6~~				~~2~~	~~1~~	~~5-1438735-0~~	~~2LIT-14A464-SD-082~~	OBSOLETE
	~~45~~		~~43~~					~~38~~		~~36~~					~~31~~						~~25~~	~~24~~								~~16~~		~~14~~		~~12~~					~~7~~	~~6~~				~~2~~	~~1~~	~~4-1438735-9~~	~~2LIT-14A464-SD-081~~	OBSOLETE
	~~45~~		~~43~~					~~38~~		~~36~~				~~32~~	~~31~~						~~25~~	~~24~~			~~21~~		~~19~~	~~18~~	~~17~~	~~16~~		~~14~~		~~12~~					~~7~~	~~6~~					~~1~~	~~4-1438735-8~~	~~2LIT-14A464-SD-080~~	OBSOLETE
	~~45~~		~~43~~				~~39~~	~~38~~	~~37~~	~~36~~					~~31~~						~~25~~	~~24~~						~~18~~	~~17~~	~~16~~		~~14~~	~~13~~	~~12~~			~~9~~		~~7~~	~~6~~				~~2~~	~~1~~	~~4-1438735-7~~	~~2LIT-14A464-SD-079~~	OBSOLETE
				42																						20		18					13		11	10								2	1	3-1438735-8	2LIT-14A464-SD-078	
				42																						20		18					13		11	10									1	3-1438735-7	2LIT-14A464-SD-077	
	~~45~~		~~43~~				~~39~~	~~38~~	~~37~~	~~36~~					~~31~~						~~25~~	~~24~~			~~21~~	~~20~~	~~19~~	~~18~~	~~17~~			~~14~~	~~13~~	~~12~~			~~9~~							~~2~~	~~1~~	~~3-1438735-6~~	~~2LIT-14A464-SD-076~~	OBSOLETE
	~~45~~		~~43~~					~~38~~		~~36~~					~~31~~						~~25~~	~~24~~			~~21~~	~~20~~	~~19~~	~~18~~	~~17~~			~~14~~		~~12~~										~~2~~	~~1~~	~~3-1438735-5~~	~~2LIT-14A464-SD-075~~	OBSOLETE
			~~43~~	~~42~~		~~40~~	~~39~~		~~37~~								~~29~~									~~20~~		~~18~~			~~15~~	~~14~~			~~11~~	~~10~~	~~9~~	~~8~~	~~7~~			~~4~~	~~3~~	~~2~~	~~1~~	~~3-1438735-3~~	~~2LIT-14A464-SD-074~~	OBSOLETE
	45		43				39	38	37	36					31						25	24				20	19	18	17			14	13	12			9							2	1	3-1438735-2	2LIT-14A464-SD-073	
	~~45~~		~~43~~					~~38~~		~~36~~					~~31~~						~~25~~	~~24~~			~~21~~	~~20~~	~~19~~	~~18~~	~~17~~	~~16~~		~~14~~		~~12~~					~~7~~					~~2~~	~~1~~	~~3-1438735-1~~	~~2LIT-14A464-SD-072~~	OBSOLETE
	~~45~~		~~43~~				~~39~~	~~38~~	~~37~~	~~36~~					~~31~~						~~25~~	~~24~~			~~21~~	~~20~~	~~19~~	~~18~~	~~17~~	~~16~~		~~14~~	~~13~~	~~12~~			~~9~~		~~7~~					~~2~~	~~1~~	~~3-1438735-0~~	~~2LIT-14A464-SD-071~~	OBSOLETE
	~~45~~		~~43~~					~~38~~		~~36~~					~~31~~						~~25~~	~~24~~			~~21~~	~~20~~	~~19~~			~~16~~		~~14~~		~~12~~					~~7~~					~~2~~	~~1~~	~~2-1438735-9~~	~~2LIT-14A464-SD-070~~	OBSOLETE
	~~45~~		~~43~~				~~39~~	~~38~~	~~37~~	~~36~~					~~31~~						~~25~~	~~24~~			~~21~~	~~20~~	~~19~~			~~16~~		~~14~~	~~13~~	~~12~~			~~9~~		~~7~~					~~2~~	~~1~~	~~2-1438735-8~~	~~2LIT-14A464-SD-069~~	OBSOLETE
	45		43					38		36					31						25	24				20	19	18	17			14		12										2	1	2-1438735-6	2LIT-14A464-SD-068	
													33																				13							6	5					2-1438735-5	2LIT-14A464-SD-067	
	~~45~~	~~44~~	~~43~~	~~42~~		~~40~~		~~38~~	~~37~~	~~36~~			~~33~~		~~31~~							~~24~~		~~22~~	~~21~~	~~20~~		~~18~~	~~17~~	~~16~~	~~15~~						~~9~~	~~8~~						~~2~~		~~2-1438735-4~~	~~2LIT-14A464-SD-066~~	OBSOLETE
			~~43~~												~~31~~		~~29~~											~~18~~										~~8~~						~~2~~		~~2-1438735-1~~	~~2LIT-14A464-SD-065~~	OBSOLETE
	~~45~~		~~43~~					~~38~~		~~36~~	~~35~~				~~31~~						~~25~~	~~24~~			~~21~~					~~16~~		~~14~~		~~12~~					~~7~~	~~6~~				~~2~~	~~1~~	~~2-1438735-0~~	~~2LIT-14A464-SD-064~~	OBSOLETE
	~~45~~		~~43~~				~~39~~	~~38~~	~~37~~	~~36~~	~~35~~				~~31~~						~~25~~	~~24~~						~~18~~	~~17~~	~~16~~		~~14~~	~~13~~	~~12~~			~~9~~		~~7~~	~~6~~				~~2~~	~~1~~	~~1-1438735-9~~	~~2LIT-14A464-SD-063~~	OBSOLETE
	~~45~~		~~43~~					~~38~~		~~36~~	~~35~~			~~32~~	~~31~~						~~25~~	~~24~~			~~21~~		~~19~~	~~18~~	~~17~~	~~16~~		~~14~~		~~12~~					~~7~~	~~6~~					~~1~~	~~1-1438735-8~~	~~2LIT-14A464-SD-062~~	OBSOLETE
	~~45~~		~~43~~					~~38~~		~~36~~	~~35~~				~~31~~						~~25~~	~~24~~								~~16~~		~~14~~		~~12~~					~~7~~	~~6~~				~~2~~	~~1~~	~~1-1438735-7~~	~~2LIT-14A464-SD-061~~	OBSOLETE
	45		43					38		36	35				31						25	24			21		19			16		14		12					7	6				2	1	1-1438735-6	2LIT-14A464-SD-060	
	45		43					38		36	35				31						25	24						18	17	16		14		12					7	6				2	1	1-1438735-5	2LIT-14A464-SD-059	
	~~45~~		~~43~~				~~39~~	~~38~~	~~37~~	~~36~~	~~35~~				~~31~~						~~25~~	~~24~~			~~21~~		~~19~~	~~18~~	~~17~~	~~16~~		~~14~~	~~13~~	~~12~~			~~9~~		~~7~~	~~6~~				~~2~~	~~1~~	~~1-1438735-4~~	~~2LIT-14A464-SD-058~~	OBSOLETE
	45		43					38		36	35				31						25	24			21		19	18	17	16		14		12					7	6				2	1	1-1438735-3	2LIT-14A464-SD-057	
				42					37																	20		18			15	14			11	10	9	8	7			4	3	2	1	1-1438735-2	2LIT-14A464-SD-056	
	45		43							36	35				31							24			21		19			16		14		12					7	6					1	1-1438735-1	2LIT-14A464-SD-055	
											35								27																								3		1-1438735-0	2LIT-14A464-SD-054	
			~~43~~												~~31~~		~~29~~											~~18~~									~~9~~	~~8~~						~~2~~		~~1438735-9~~	~~2LIT-14A464-SD-053~~	OBSOLETE
											35								27																				7						1438735-8	2LIT-14A464-SD-052	
TERMINAL HOLE POSITION																																																
PIN-OUT CHART KEYING OPTION "A" 4																																																

THIS DRAWING IS A CONTROLLED DOCUMENT.	DWN R. VESTAL 01AUG2003	TE Connectivity	
DIMENSIONS: mm	TOLERANCES UNLESS OTHERWISE SPECIFIED: 0 PLC ±- 1 PLC ±0.3 2 PLC ±0.10 3 PLC ±- 4 PLC ±- ANGLES ±3°	CHK D. STRAUSSER 01AUG2003	NAME 46 WAY PCM CONNECTOR HARNESS ASSEMBLY
		APVD D. STRAUSSER 01AUG2003	
		PRODUCT SPEC -	
		APPLICATION SPEC -	SIZE A1 / CAGE CODE 00779 / DRAWING NO C-1438082 / RESTRICTED TO
MATERIAL SEE TABLE -	FINISH SEE TABLE -	WEIGHT -	
		CUSTOMER DRAWING	SCALE 4:1 / SHEET 3 OF 5 / REV S12

© 2020 TE Connectivity. All Rights Reserved.

REVISIONS					
P	LTR	DESCRIPTION	DATE	DWN	APVD
	-	SEE SHEET 1	-	-	-

46	45	44	43	42	41	40	39	38	37	36	35	34	33	32	31	30	29	28	27	26	25	24	23	22	21	20	19	18	17	16	15	14	13	12	11	10	9	8	7	6	5	4	3	2	1	PART NUMBER	FORD PART NUMBER	
		44	43	42	41			38												26																			7		5					9-1438082-9	2LIT-14A464-TD-044	
		44						38												26																			7							9-1438082-8	2LIT-14A464-TD-043	
						40	39	38			35	34										24			21			18		16	15		13	12			9	8	7		5					9-1438082-2	2LIT-14A464-TD-042	
46			43	42		40					35	34			31			28				24			21		19							12			9				5	4			1	8-1438082-2	2LIT-14A464-TD-041	OBSOLETE
						40	39	38			35	34										24			21			18		16	15		13	12				8	7		5					8-1438082-1	2LIT-14A464-TD-040	
											35								27																		9			6			3			7-1438082-7	2LIT-14A464-TD-039	OBSOLETE
			43	42			39	38	37					32				28									19	18	17	16						10	9									7-1438082-6	2LIT-14A464-TD-038	OBSOLETE
			43	42		40					35							28				24			21		19							12							5	4			1	7-1438082-2	2LIT-14A464-TD-037	
			43	42							35											24			21		19							12							5	4			1	7-1438082-1	2LIT-14A464-TD-036	OBSOLETE
			43	42			39	38	37									28									19	18	17	16			13			10	9									7-1438082-0	2LIT-14A464-TD-035	OBSOLETE
			43	42			39	38	37									28									19	18	17	16						10	9									6-1438082-9	2LIT-14A464-TD-034	
		44		42				38												26																			7								6-1438082-8	2LIT-14A464-TD-033	OBSOLETE
			43	42			39	38	37					32				28									19	18	17	16			13			10	9									6-1438082-7	2LIT-14A464-TD-032	OBSOLETE
		44		42				38											27	26				22																						6-1438082-5	2LIT-14A464-TD-031	OBSOLETE
		44		42				38												26																										6-1438082-4	2LIT-14A464-TD-030	
			43	42				38	37					32													19	18	17	16						10	9									6-1438082-0	2LIT-14A464-TD-029	
			43	42			39	38	37					32													19	18	17	16			13			10	9									5-1438082-9	2LIT-14A464-TD-028	
			43	42				38	37					32													19	18	17	16						10	9									5-1438082-8	2LIT-14A464-TD-027	OBSOLETE
			43	42			39	38										28									19	18	17	16						10	9									5-1438082-7	2LIT-14A464-TD-026	
46	45		43									34	33	32	31				27					22	21	20	19	18		16	15	14	13	12		10	9	8	7						1	5-1438082-4	2LIT-14A464-TD-025	OBSOLETE
		44		42				38																																			3			5-1438082-3	2LIT-14A464-TD-024	OBSOLETE
						40	39				35	34													21			18		16	15		13				9	8	7							5-1438082-1	2LIT-14A464-TD-023	
46	45	44	43		41	40						34	33	32	31		29		27					22	21	20	19	18		16	15	14	13	12		10	9	8	7						1	4-1438082-6	2LIT-14A464-TD-022	
		44		42				38								30			27	26				22																						4-1438082-5	2LIT-14A464-TD-021	
		44		42				38								30																											3			4-1438082-4	2LIT-14A464-TD-020	
		44		42				38								30				26																										4-1438082-3	2LIT-14A464-TD-019	
46	45		43									34	33	32	31				27						21	20	19	18		16	15	14	13	12		10	9	8	7						1	4-1438082-1	2LIT-14A464-TD-018	
						40	39				35	34													21			18		16	15		13				9	8	7		5					3-1438082-9	2LIT-14A464-TD-017	
		44		42				38	37							30			27	26				22													9									2-1438082-8	2LIT-14A464-TD-016	
		44		42				38	37							30																					9									2-1438082-7	2LIT-14A464-TD-015	
		44		42				38	37							30				26																	9									2-1438082-6	2LIT-14A464-TD-014	
			43	42			39	38	37				33	32				28	27	26				22	21	20	19	18	17	16			13			10										2-1438082-4	2LIT-14A464-TD-013	
46	45	44	43									34	33	32	31				27					22	21	20	19	18			15	14	13	12		10	9	8	7						1	2-1438082-1	2LIT-14A464-TD-012	
46	45	44	43									34	33	32	31				27					22	21	20	19	18		16	15	14	13	12		10	9	8	7						1	2-1438082-0	2LIT-14A464-TD-011	
			43	42			39	38	37									28									19	18	17	16						10										1-1438082-7	2LIT-14A464-TD-010	
			43	42			39	38	37					32				28	27	26					21	20	19	18	17	16			13			10										1-1438082-6	2LIT-14A464-TD-009	
			43	42			39	38	37					32				28									19	18	17	16			13			10										1-1438082-5	2LIT-14A464-TD-008	
			43	42				38	37					32													19	18	17	16						10										1-1438082-4	2LIT-14A464-TD-007	
46	45	44	43									34	33	32	31				27					22	21	20	19	18			15	14	13	12		10	9	8	7						1	1-1438082-3	2LIT-14A464-TD-006	
46	45	44	43									34	33	32	31				27					22	21	20	19	18		16	15	14	13	12		10	9	8	7						1	1-1438082-2	2LIT-14A464-TD-005	
			43	42			39	38										28										18	17	16						10										1438082-9	2LIT-14A464-TD-004	
														32																																1438082-8	2LIT-14A464-TD-003	
												34	33	32	31				27					22	21	20	19	18		16	15	14	13	12		10	9	8	7						1	1438082-7	2LIT-14A464-TD-002	
												34	33	32	31				27					22	21	20	19	18			15	14	13	12		10	9	8	7						1	1-1438082-0	2LIT-14A464-TD-001	
																																														1438082-2	2LIT-14A464-TD-000	

TERMINAL HOLE POSITION

PIN-OUT CHART KEYING OPTION "B" (4)

THIS DRAWING IS A CONTROLLED DOCUMENT.

DIMENSIONS: mm

TOLERANCES UNLESS OTHERWISE SPECIFIED:
0 PLC ±-
1 PLC ±0.3
2 PLC ±0.10
3 PLC ±-
4 PLC ±-
ANGLES ±1°

MATERIAL: SEE TABLE -

FINISH: SEE TABLE -

DWN R. VESTAL 01AUG2003
CHK D. STRAUSSER 01AUG2003
APVD D. STRAUSSER 01AUG2003

PRODUCT SPEC -

APPLICATION SPEC -

WEIGHT -

TE Connectivity

NAME 46 WAY PCM CONNECTOR HARNESS ASSEMBLY

SIZE A1 | CAGE CODE 00779 | DRAWING NO C-1438082 | RESTRICTED TO

CUSTOMER DRAWING

SCALE 4:1 | SHEET 4 OF 5 | REV S12

4805 (3/13)

© 2020 TE Connectivity. All Rights Reserved.

P	LTR	DESCRIPTION	DATE	DWN	APVD
	-	SEE SHEET 1	-	-	-

REVISIONS

46	45	44	43	42	41	40	39	38	37	36	35	34	33	32	31	30	29	28	27	26	25	24	23	22	21	20	19	18	17	16	15	14	13	12	11	10	9	8	7	6	5	4	3	2	1	PART NUMBER	FORD PART NUMBER	
	45	44	43	42	41			38											27								19												7		5					7-1438735-7	2LIT-14A464-TD-086	
		44		42				38											27																				7		5					7-1438735-6	2LIT-14A464-TD-085	
	45	44	43	42	41			38																		19												7		5	4				7-1438735-5	2LIT-14A464-TD-084	
		44		42				38																		19												7		5	4				7-1438735-4	2LIT-14A464-TD-083	
		44	43	42	41			38																														7		5	4				7-1438735-3	2LIT-14A464-TD-082	
		44		42				38											27					22														7		5	4				7-1438735-2	2LIT-14A464-TD-081	
		44		42				38																														7		5	4				7-1438735-1	2LIT-14A464-TD-080	
			43	42																26																		7	6		4	3			7-1438735-0	2LIT-14A464-TD-079	
																				26																		7	6			3			6-1438735-9	2LIT-14A464-TD-078	
		44	43	42																26							19												7	6		4				6-1438735-8	2LIT-14A464-TD-077	
	45	44	43	42	41			38																		19												7		5					6-1438735-6	2LIT-14A464-TD-076	
		44		42				38																		19												7		5					6-1438735-5	2LIT-14A464-TD-075	
		44	43	42	41			38																		19												7		5					6-1438735-4	2LIT-14A464-TD-074	
		~~44~~						~~38~~											~~27~~					~~22~~			~~19~~											~~8~~		~~6~~						~~6-1438735-0~~	~~2LIT-14A464-TD-073~~	OBSOLETE
		44						38											27					22			19											8	7	6						5-1438735-9	2LIT-14A464-TD-072	
		44																		26				22			19													6						5-1438735-8	2LIT-14A464-TD-071	
		44																		26				22			19												7	6						5-1438735-7	2LIT-14A464-TD-070	
		~~44~~						~~38~~											~~27~~	~~26~~				~~22~~			~~19~~													~~6~~						~~5-1438735-6~~	~~2LIT-14A464-TD-069~~	OBSOLETE
		~~44~~						~~38~~											~~27~~	~~26~~				~~22~~			~~19~~												~~7~~	~~6~~						~~5-1438735-5~~	~~2LIT-14A464-TD-068~~	OBSOLETE
		44																		26							19												7	6						5-1438735-4	2LIT-14A464-TD-067	
		44																		26							19													6						5-1438735-3	2LIT-14A464-TD-066	
			43	42																26																		7	6		4				5-1438735-2	2LIT-14A464-TD-065	
																				26																		7	6						5-1438735-1	2LIT-14A464-TD-064	
		44		42				38											27					22														7		5					4-1438735-6	2LIT-14A464-TD-063	
		~~44~~		~~42~~				~~38~~																														~~7~~		~~5~~					~~4-1438735-5~~	~~2LIT-14A464-TD-062~~	OBSOLETE
		44		42				38											27	26				22			19											8		6						4-1438735-4	2LIT-14A464-TD-061	
		44		42				38											27	26				22			19											8	7	6						4-1438735-3	2LIT-14A464-TD-060	
		44																		26							19											8	7	6						4-1438735-2	2LIT-14A464-TD-059	
		44																		26							19											8		6						4-1438735-1	2LIT-14A464-TD-058	
			43	42																26																	8	7	6	5					4-1438735-0	2LIT-14A464-TD-057	
																				26																	8	7	6						3-1438735-9	2LIT-14A464-TD-056	
~~46~~	~~45~~	~~44~~	~~43~~									~~34~~	~~33~~	~~32~~	~~31~~				~~27~~		~~25~~					~~20~~				~~16~~		~~14~~	~~13~~	~~12~~		~~10~~	~~9~~	~~8~~	~~7~~	~~6~~					~~1~~	~~3-1438735-4~~	~~2LIT-14A464-TD-055~~	OBSOLETE
46	45		43									34	33	32	31				27		25					20				16		14	13	12		10	9	8	7	6					1	2-1438735-7	2LIT-14A464-TD-054	
~~46~~	~~45~~	~~44~~	~~43~~	~~42~~		~~40~~					~~35~~	~~34~~	~~33~~	~~32~~	~~31~~			~~28~~				~~24~~			~~21~~		~~19~~							~~12~~			~~9~~				~~5~~	~~4~~			~~1~~	~~2-1438735-3~~	~~2LIT-14A464-TD-053~~	OBSOLETE
	45	44	43	42		40							33	32	31			28							21		19										9				5	4				2-1438735-2	2LIT-14A464-TD-052	
		44		42				38											27	26				22														7		5					1438735-7	2LIT-14A464-TD-051	
						40	39	38			35	34										24			21			18					13	12			9	8	7		5					1438735-6	2LIT-14A464-TD-050	
		~~44~~		~~42~~				~~38~~											~~27~~	~~26~~				~~22~~																~~5~~					~~1438735-5~~	~~2LIT-14A464-TD-049~~	OBSOLETE
		44		42				38												26				22																5					1438735-4	2LIT-14A464-TD-048	
		44		42				38												26																		7		5					1438735-3	2LIT-14A464-TD-047	
		44		42				38												26																				5					1438735-2	2LIT-14A464-TD-046	
		44						38									29	28		26																		7				3			1438735-1	2LIT-14A464-TD-045	

TERMINAL HOLE POSITION

PIN-OUT CHART KEYING OPTION "B" 4

THIS DRAWING IS A CONTROLLED DOCUMENT.

DIMENSIONS: mm

TOLERANCES UNLESS OTHERWISE SPECIFIED:
0 PLC ±-
1 PLC ±0.3
2 PLC ±0.10
3 PLC ±-
4 PLC ±-
ANGLES ±3°

MATERIAL: SEE TABLE -

FINISH: SEE TABLE -

DWN R. VESTAL 01AUG2003
CHK D. STRAUSSER 01AUG2003
APVD D. STRAUSSER 01AUG2003

PRODUCT SPEC -

APPLICATION SPEC -

WEIGHT -

TE Connectivity

NAME: 46 WAY PCM CONNECTOR HARNESS ASSEMBLY

SIZE A | CAGE CODE 00779 | DRAWING NO C-1438082 | RESTRICTED TO

CUSTOMER DRAWING | SCALE 4:1 | SHEET 5 OF 5 | REV S12