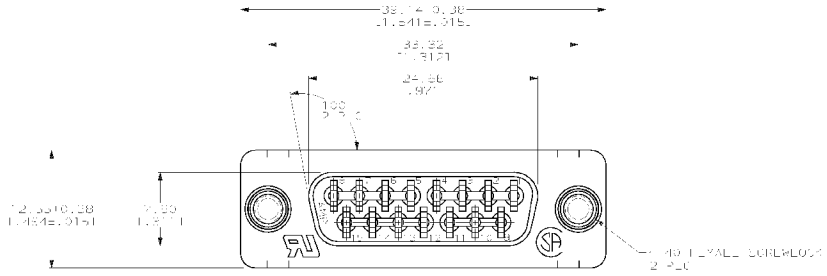

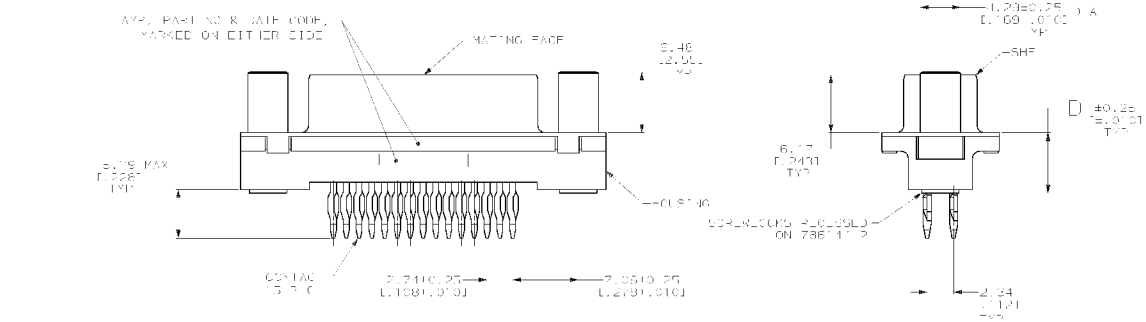

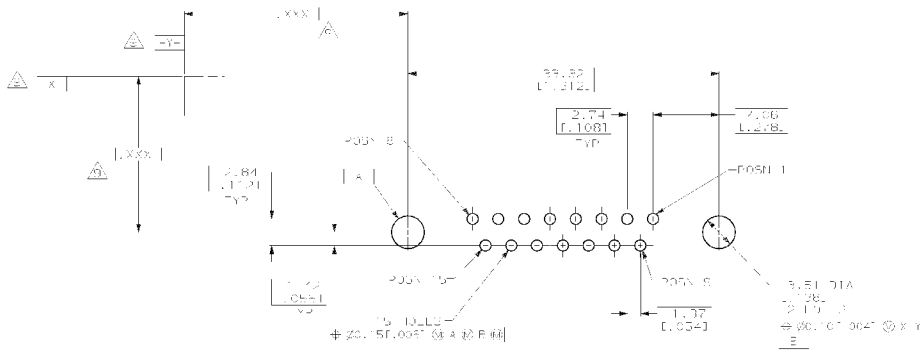

RECOMMENDED PC BOARD MOUNTING DIMENSIONS
CONNECTOR SIDE OF BOARD

REVISED PER EC CP-00079-04

RECEPTACLE ASSEMBLY, SIZE 2, 15 POSITION, ACTUATOR PINS, VERTICAL, FRONT METAL SHELL AMPLIMITE™ D 28

AMP Incorporated
Harrisburg, PA 17105-3608

DO NOT SCALE PRINT.
UNLESS SPECIFIED
DIMENSIONS: mm [INCHES]
TOLERANCE: ±0.1
X DEC ±0.1 [±0.004]
X DEC ±0.5 [±0.020]
ANGLES ±2°
MATERIAL
HOUSING: SEE MATERIAL CHART
CONTACTS:
SHELL:
FINISH
CONTACTS:
SHELL:

DR: 31.52 J.KERMAN
CHK: 24.02 S.DICKS
APPD: 25.02 M.JOHNSON
APPD: 25.02 A.WEBER
PRODUCT SPEC: 108-00014
APPLICATION SPEC:

SIZE: D
CAGE CODE: 00779
DRAWING NO: 786124
SCALE: 2/1
SHEET 1 OF 2

CUSTOMER DRAWING

09-SEP-96 15:52:13 ano34723 /home/ser4026d/jeh04/sect4023/ano34723/edmacs