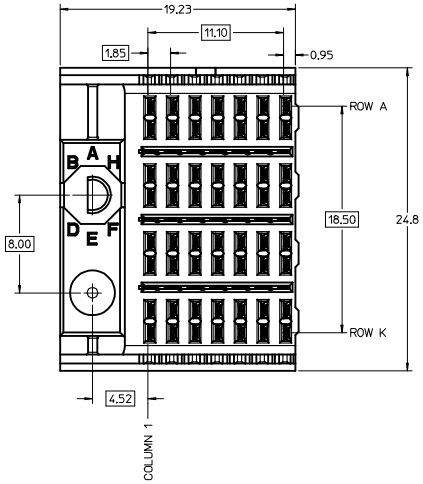

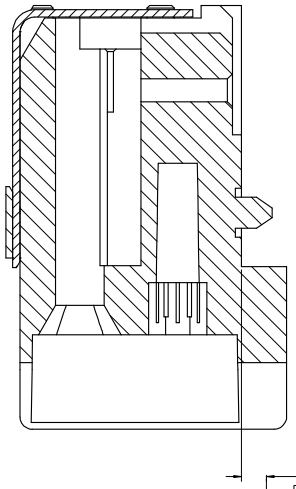

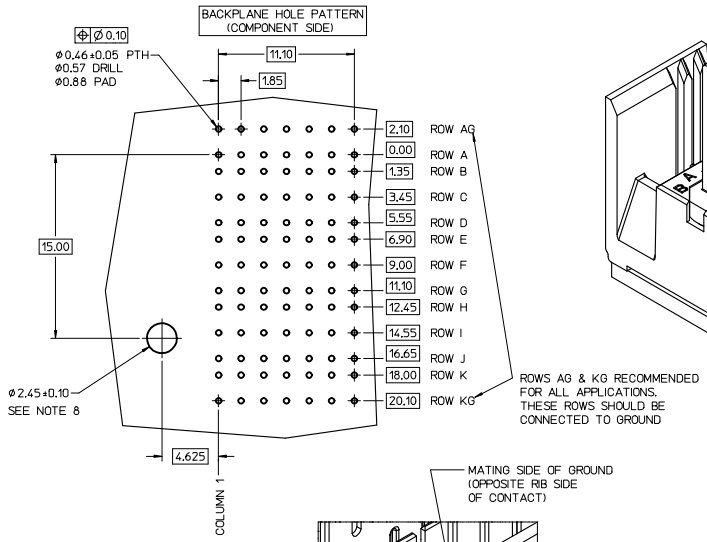

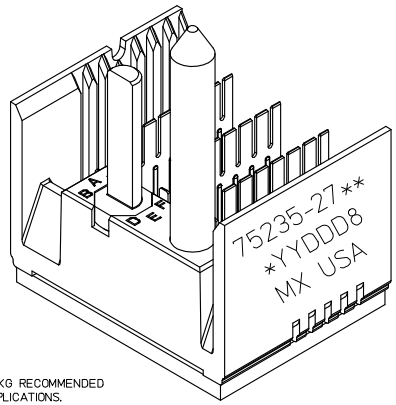

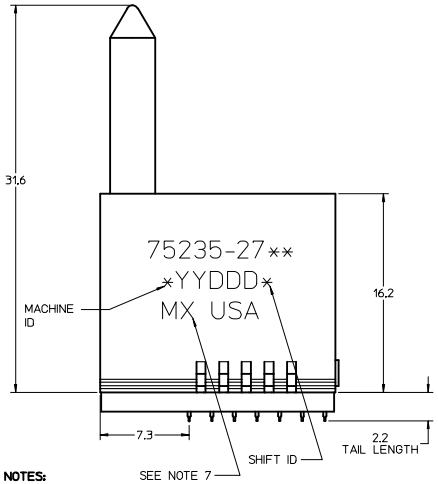

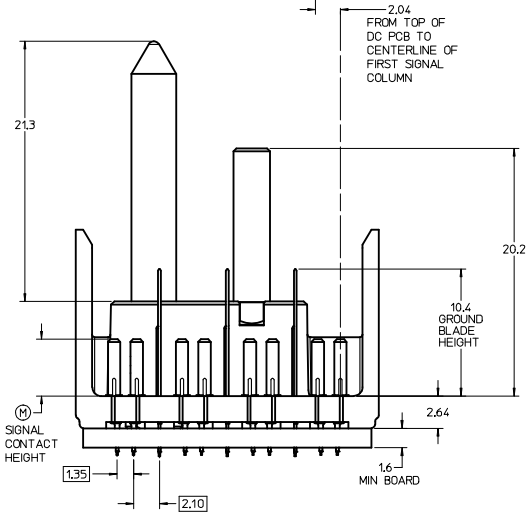

LEAD-FREE
PLATING

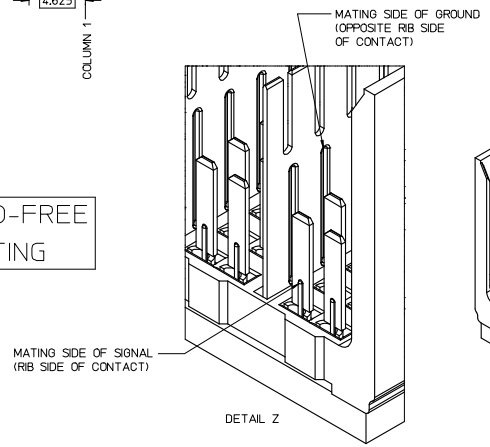

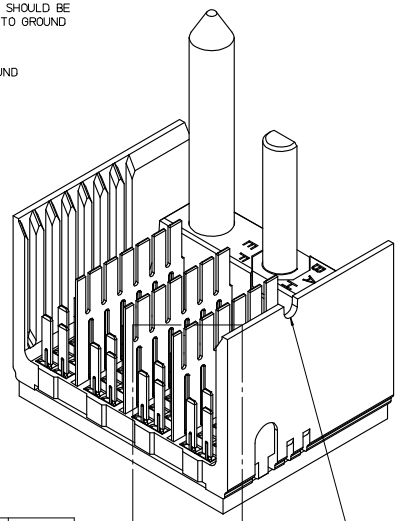

P/N 75235-( )	-270* 0	-271* A	-272* B	-273* C	-274* D	-275* E	-276* F	-277* G	-278* H
KEYING PIN ORIENTATION									

NOTES:

1. MATERIAL: HOUSING - LIQUID CRYSTAL POLYMER (LCP) GLASS-FILLED. UL 94V-0. COLOR - GRAY. SIGNAL CONTACT AND GROUND BLADE - HIGH PERFORMANCE COPPER ALLOY.
2. FINISHES: SELECTIVE GOLD (Au) ON CONTACT AREA. SELECTIVE MATTE TIN (Sn) ON PCB TAILS. NICKEL (Ni) OVERALL.
3. THIS PART CONFORMS TO MOLEX PRODUCT SPECIFICATION PS-75221-999.
4. FOR MIXED CONTACT MATING LENGTHS CONSULT MOLEX FOR AVAILABILITY. CONTACT PAIRS MUST BE THE SAME LENGTH.
5. FOR SPECIFIC PART NUMBER AND MATING INFORMATION PLEASE REFER TO CHART.
6. PACKAGE PER PK-70873-563.
7. MARK PART NUMBER AND DATE CODE APPROXIMATELY WHERE SHOWN.
8. OPTIONAL HOLE LOCATION FOR GROUNDED GUIDE PIN OR ADDITIONAL GUIDE PIN SUPPORT. FOR GROUNDED GUIDE PIN, HOLE TO BE PLATED, DRILL SIZE Ø2.58, PAD SIZE Ø5.50
9. THIS PART CONFORMS TO MOLEX COSMETIC SPECIFICATION PS-45499-002 CLASS B.
10. MAPS (MOLEX ADVANCED PLATING SYSTEM)

THE PRIMARY CARTON WITH A LABEL STATING "ELV AND RoHS COMPLAINT" IS LEAD FREE. CARTONS WITHOUT THIS LABEL MAY CONTAIN LEAD.

MODULE ORIENTATION
LEFT = 2

75235-2 7 * *

KEYING ORIENTATION
0 = NONE
1 = A
2 = B
ETC...

COLUMN
7= 7 COL

PIN LENGTH DIM "M"	GOLD (Au) THICKNESS micrometers
0=3.55 mm	0.25 (MAPS)
1=4.55 mm	
2=5.55 mm	
3=3.55 mm	0.76
4=4.55 mm	
5=5.55 mm	
7=3.55 mm	1.27
8=4.55 mm	
9=5.55 mm	

REV TO LEAD-FREE
EC NO: UCP2013-1905
DRWN:GES 2012/09/06
CHK:DJMWOLFE 2012/09/07
APPR:SMILLER 2012/12/05
DESCRIPTION
REV

QUALITY SYMBOLS: =0 =0 =0

GENERAL TOLERANCES (UNLESS SPECIFIED)

	mm	INCH
4 PLACES	± ---	± ---
3 PLACES	± ---	± ---
2 PLACES	± 0.25	± ---
1 PLACE	± 0.38	± ---
0 PLACE	± ---	± ---
ANGULAR ±1/2°		

DRAFT WHERE APPLICABLE MUST REMAIN WITHIN DIMENSIONS

DIMENSION STYLE: MM ONLY
SCALE: 5:1
DESIGN UNITS: METRIC
THIRD ANGLE PROJECTION

		DATE
DRAWN BY	JBINGHAM	2006/11/30
CHECKED BY	SREED	2006/11/30
APPROVED BY	SMILLER	2012/12/05
MATERIAL NO.	SEE CHART	

TITLE: GBX 4-PAIR BACKPLANE LF 7-COLUMN LEFT END SALES ASSEMBLY DRAWING

molex

DOCUMENT NO. SD-75235-270
SHEET NO. 1 OF 1
SIZE D

THIS DRAWING CONTAINS INFORMATION THAT IS PROPRIETARY TO MOLEX INCORPORATED AND SHOULD NOT BE USED WITHOUT WRITTEN PERMISSION