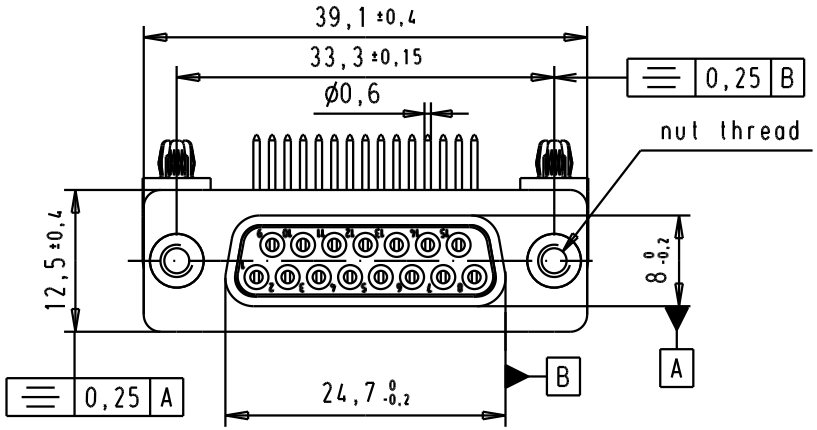

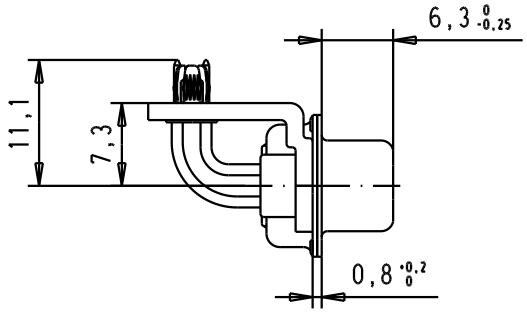

SPECIFICATION: C Filter

Mating Cycles	500
Capacitance	47pf ±20%
Working Voltage	100v
Current Rating	7.5A
Insulation Resistance	>1GΩ

Minimum insertion loss

FREQUENCY (MHz)	ATTENUATION (dB)
5	-
10	-
50	-
100	-
500	30dB
1000	35dB

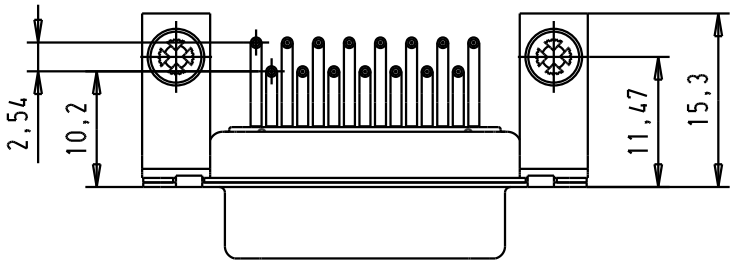

PCB Layout, component side
PCB thoickness 1,6 mm

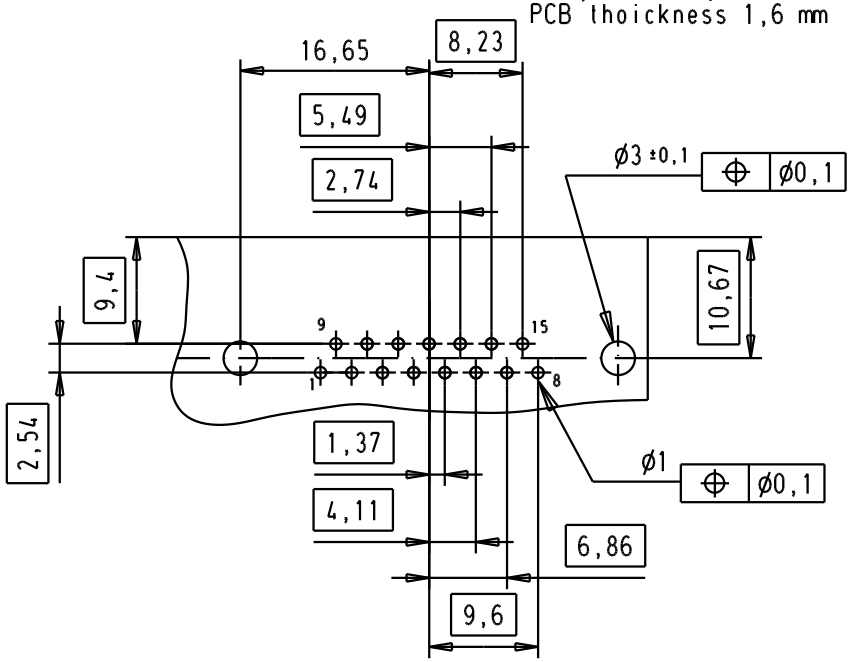

09 64 214 7213	M3
09 64 214 7212	UNC 4-40
Part number	nut thread

31897	17/05/04	AF
31058	8-JUL-02	CV
Mod.	Dat.	Name

	Dat.	Name
Detail.	8-JUL-02	CV
Insp.		
Stand.		

All Dim. in mm
Orig. Size DIN A 4

HARTING EURL
F-95972 Paris

D-Sub, female, angled, 15 Poles, with turned solder pin , nut and board lock

Ma?Mstab/ Scale: 1.5:1

TB 0964214721x

Sub.

Blatt/ Page: 1/4