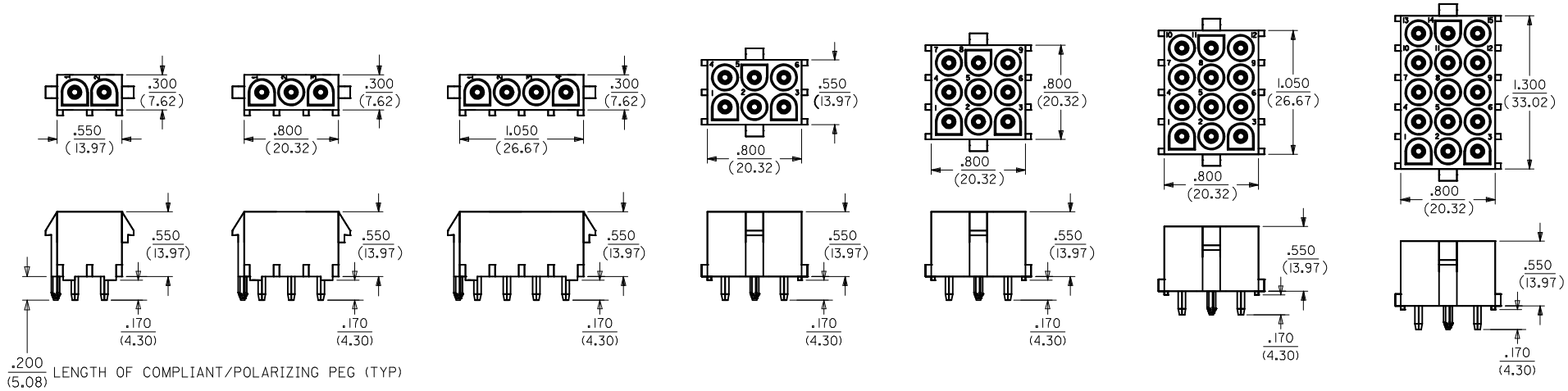

P.C. BOARD MOUNTING DIMENSIONS

2, 3 & 4 POSITION HEADER ASSEMBLIES

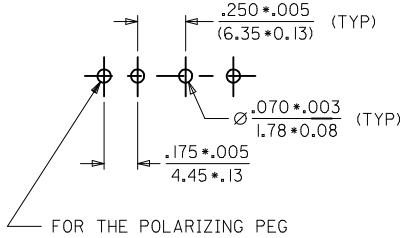

6, 9, 12 & 15 POSITION HEADER ASSEMBLY

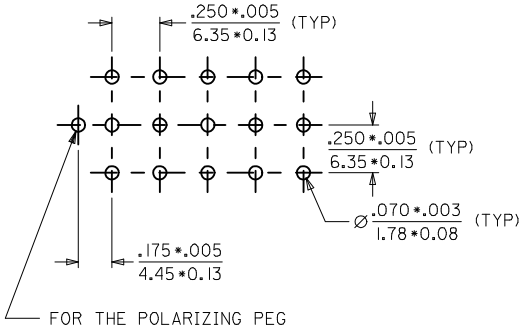

PLATING SPEC CHANGED TO ES-88-P921 EC NO: 12016-0114 DRWN:SS06 CHKD: APPR: LSHWARG	2016/05/18 2016/08/30	DESCRIPTION	REV	QUALITY SYMBOLS	GENERAL TOLERANCES (UNLESS SPECIFIED) mm / INCH	DIMENSION STYLE IN/MM	SCALE NTS	DESIGN UNITS INCH	THIRD ANGLE PROJECTION
A3					4 PLACES ±--- / ±---	DRAWN BY S.S DATE 01/09/28	TITLE HEADER HOUSING ASSEMBLY .084/(2.13) SERIES WITH COMPLAINT/POLARISING PEG		
				=0	3 PLACES ±--- / ±0.010	CHECKED BY G.L DATE 01/09/28			
				=0	2 PLACES ±0.25 / ±0.014				
					1 PLACE ±0.36 / ±---	APPROVED BY G.L DATE 01/09/28	molex		
				=0	0 PLACE ± / ±				
					ANGULAR ±1/2°	MATERIAL NO. SEE SHEET 2	DOCUMENT NO. SD-36538-001	SHEET NO. 1 OF 2	
					DRAFT WHERE APPLICABLE MUST REMAIN WITHIN DIMENSIONS	SIZE A1	THIS DRAWING CONTAINS INFORMATION THAT IS PROPRIETARY TO MOLEX INCORPORATED AND SHOULD NOT BE USED WITHOUT WRITTEN PERMISSION		

ITEM NO.	CIRCUIT SIZE	MATERIAL COLOR (SEE NOTE 1)
36538-0001	2	A
36538-0002		B
36538-0003		C
36538-0004	3	A
36538-0005		B
36538-0006		C
36538-0007	9	A
36538-0008		B
36538-0009		C
36538-0010	4	A
36538-0011		B
36538-0012		C
36538-0013	6	A
36538-0014		B
36538-0015		C
36538-0016	15	A
36538-0017		B
36538-0018		C
36538-0019	12	A
36538-0020		B
36538-0021		C

NOTES:

1. MATERIAL CODES:
   HOUSING:
   "A" = POLYESTER (PBT), UL94V-0, COLOR: NATURAL(WHITE)
   "B" = POLYESTER (PBT), UL94V-0, COLOR: BRICK RED
   "C" = NYLON (PA66), UL94V-2, COLOR: NATURAL(TRANSLUCENT)
   TERMINAL: PHOSPHOR BRONZE
2. PLATING CODES: ES-88-P921
   140 µin(3.5µ) MIN 240 µin(6µ) MAX OVERALL TIN HOT-DIPPED
3. TERMINAL LENGTH IS SUITABLE FOR .062/(1.57mm) THICK PC BOARD
4. DIMENSIONS ARE FOR REFERENCE ONLY UNLESS INDICATED OTHERWISE
5. HEADER ASSEMBLY HOUSING MATE WITH:
   PLUG HOUSINGS, .084/(2.13) DIA. SERIES 42021
6. CONTACTS ARE ON .250/(6.35) GRID CENTERLINE SPACING
7. REFER PACKAGING SPECIFICATION
   - PK-43255-001 FOR 2,3 & 4 CIRCUIT
   - PK-43255-003 FOR 6,9,12 & 15 CIRCUIT

PLATING SPEC CHANGED TO ES-88-P921 2016/05/18
EC NO: 12016-0114
DRWN:SS06
CHKD:
APPR: ISHWARG 2016/08/30
REV DESCRIPTION

A3

QUALITY SYMBOLS
=0
=0
=0

GENERAL TOLERANCES (UNLESS SPECIFIED)

	mm	INCH
4 PLACES	± ---	± ---
3 PLACES	± ---	± 0.010
2 PLACES	± 0.25	± 0.014
1 PLACE	± 0.36	± ---
0 PLACE	±	±

ANGULAR ±1/2°

DRAFT WHERE APPLICABLE MUST REMAIN WITHIN DIMENSIONS

DIMENSION STYLE: IN/MM
SCALE: NTS
DESIGN UNITS: INCH
THIRD ANGLE PROJECTION

		DATE
DRAWN BY	S.S	01/09/28
CHECKED BY	G.L	01/09/28
APPROVED BY	G.L	01/09/28

TITLE: HEADER HOUSING ASSEMBLY .084/(2.13) SERIES WITH COMPLAINT/POLARISING PEG

molex

MATERIAL NO.: SEE CHART
DOCUMENT NO.: SD-36538-001
SHEET NO.: 2 OF 2
SIZE: A1

THIS DRAWING CONTAINS INFORMATION THAT IS PROPRIETARY TO MOLEX INCORPORATED AND SHOULD NOT BE USED WITHOUT WRITTEN PERMISSION