© – TE Connectivity. All Rights Reserved.

REVISIONS					
P	LTR	DESCRIPTION	DATE	DWN	APVD
	C1	RESIVED AS PER THE ECR-23-169440	19APR2023	JK	WH

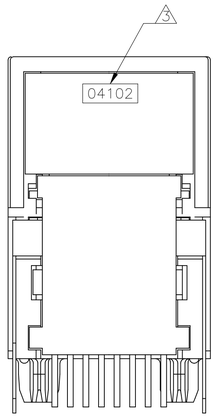

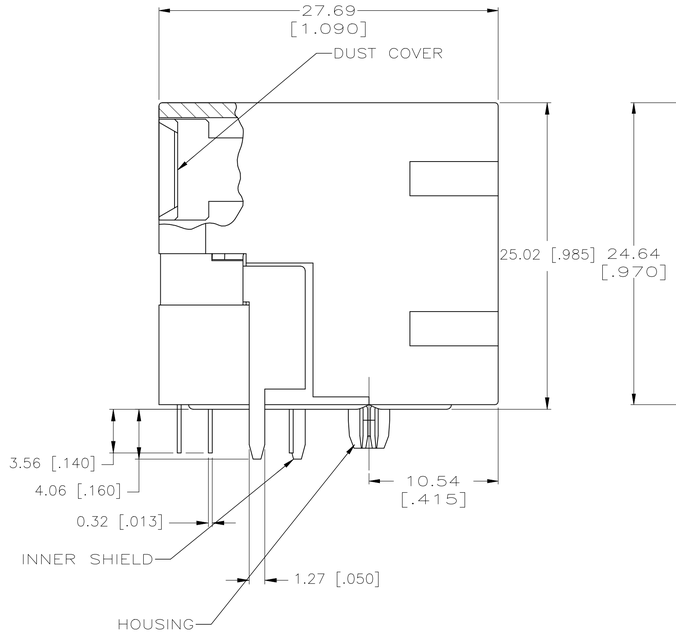

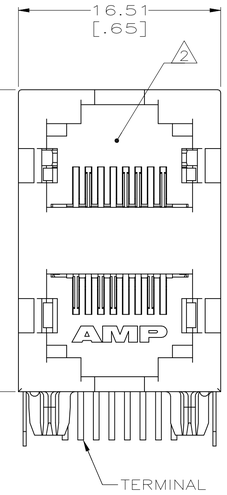

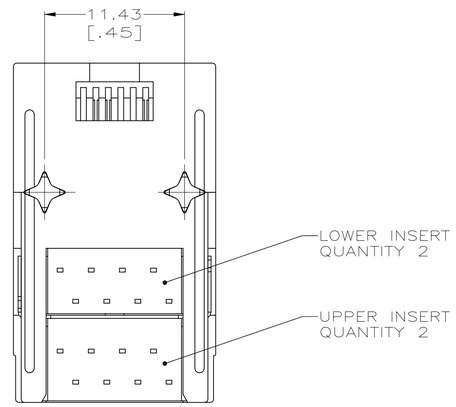

1. MATERIAL:
HOUSING – PCT POLYESTER, BLACK, UL94V-0.
OVERMOLDED TERMINAL ARRAY – PBT, BROWN.
TERMINALS – 0.33 [.013] THICK PHOS BRONZE PLATED WITH 1.27µm [.000050] MIN THICK HARD GOLD IN LOCALIZED AREA AND 3.81µm [.000150] MIN THICK MATTE TIN IN SOLDER AREA OVER 1.27µm [.000050] MIN THICK NICKEL UNDERPLATE.
OUTER SHIELD AND INNER SHIELD – 0.25 [.010] THICK COPPER ALLOYPLATED WITH 2.03µm [.000080] MIN BRIGHT TIN OVER 1.27 [.000050] MIN NICKEL

2. JACK CAVITY CONFORMS TO FCC RULES AND REGULATIONS, PART 68 SUBPART F.

3. DATE CODE LOCATED ON REAR OF PART APPROXIMATELY AS SHOWN:
FIRST 2 DIGITS ARE LAST 2 DIGITS OF YEAR,
SECOND 2 DIGITS ARE MANUFACTURING WORK WEEK,
LAST DIGIT IS DAY OF WEEK, WITH SUNDAY = 1.

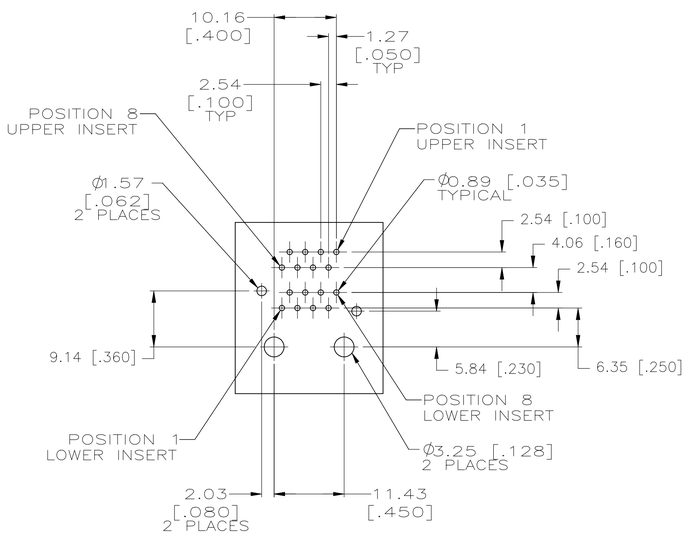

PC BOARD LAYOUT VIEWED FROM COMPONENT SIDE
SCALE 2:1

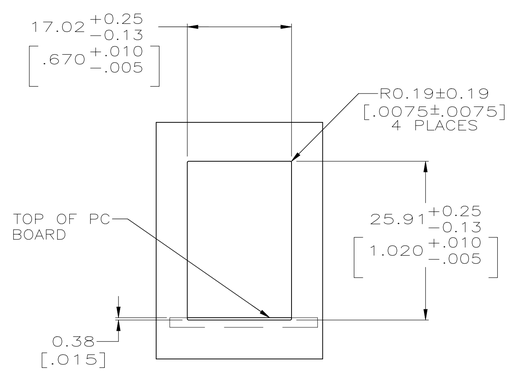

SUGGESTED PANEL CUTOUT DIMENSIONS
SCALE 2:1

THIS DRAWING IS A CONTROLLED DOCUMENT.	DWN 08JUNE2005 T. SPRINKLE/L.A.MAYER	TE Connectivity	5569450-1 PART NUMBER
DIMENSIONS: mm [INCHES]	TOLERANCES UNLESS OTHERWISE SPECIFIED: 0 PLC ± – 1 PLC ± – 2 PLC ± 0.25[.01] 3 PLC ± 0.13[.005] 4 PLC ± – ANGLES ± –	CHK 08JUNE2005 J.WESTMAN	
		APVD 08JUNE2005 S.FLICKINGER	NAME STACKED MODULAR JACK ASSEMBLY, 2 X 1 PORT,8 POSITION,UNSHIELDED, CATEGORY 5
		PRODUCT SPEC 108-1163-2	
		APPLICATION SPEC 114-2048	SIZE A1 / CAGE CODE 00779 / DRAWING NO C-5569450 / RESTRICTED TO —
MATERIAL SEE NOTE 1	FINISH SEE NOTE 1	WEIGHT 0.000000	
		CUSTOMER DRAWING	SCALE 4:1 / SHEET 1 OF 1 / REV C1