SIGN	DATE	DESCRIPTION	APPROVER
1	08/22'13	Add is cULus ///// update the drawing	Da cheng

THIS IS CAD DRAWING, DO NOT REVISE MANUALLY!!!

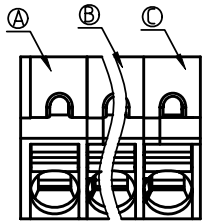

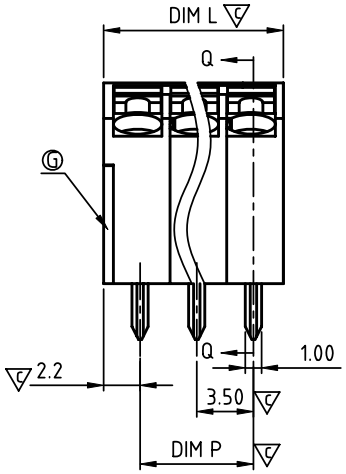

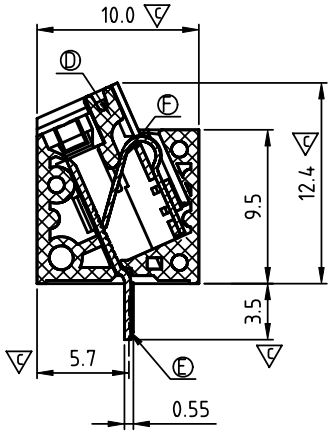

SECTION Q-Q

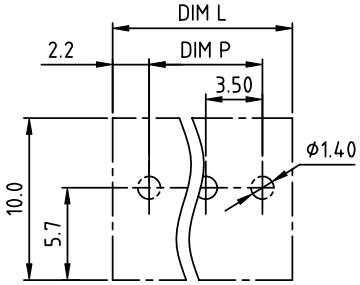

1 P.C.B Layout
Top view

1 N = Number of poles

DimL=N×3.5+0.6
DimP=(N-1)×3.5

POLES	DIM L	DIM P
2p-4p	±0.1	±0.1
5p-8p	±0.2	±0.2
9p-12p	±0.3	±0.3
13p-16p	±0.4	±0.4

Material:

- Item Ⓐ Terminal with cover of body: Thermoplastic (UL94V-0)
- Item Ⓑ Terminal normal body: Thermoplastic (UL94V-0)
- Item Ⓒ Terminal side body: Thermoplastic (UL94V-0)
- 1 Item Ⓓ Terminal lever: Thermoplastic (UL94V-0) Orange(RAL2011/P)
- Item Ⓔ Female Contact : Brass. Tin Plated.
- Item Ⓕ Spring clamp : Stainless steel
- Item Ⓖ Terminal cover: Thermoplastic (UL94V-0)

Electrical:	cULus
Voltage rating:	300 V
Current rating:	10A
Wire range:	
Solid wire(AWG):	16-26
Stranded wire(AWG):	16-26
Wire strip length:	8-9 mm
Withstanding Voltage:	1.6 KV
Operating temperature:	-40°C to +115°C
Soldering temperature:	260°C ±5°C/5 Sec
1 Safety Approval:	
Critical dimension:	

NH xx 1 0 x 0 xxxx G

- 1 No. OF POLES
  - 02: 2 POLES
  - ⋮
  - 16: 16 POLES
- 1 Body Color
  - 0 Black (RAL9005)
  - 2 Red (RAL3001/D)
  - 3 Orange(RAL2011/P)
  - 4 Yellow(RAL1018/A)
  - 5 Green(RAL6018/T)
  - 6 Blue (RAL5015/A)
  - 8 Grey(RAL7004/P)
  - 9 White(RAL1102)
  - C Multiple colors
- 0000: "@" Logo (Standard)
  - 000A: "ANYTEK" Mark
  - Any special item by customer requst. please contact sales department.
- RoHS compliant (lead<4%) In copper Alloy

ANYTEK

CUSTOMER COPY

ALL RIGHTS RESERVED. REPRODUCTION OR ISSUE TO THIRD PARTIES IN ANY FORM WHATEVER IS NOT PERMITTED WITHOUT WRITTEN AUTHORITY FROM THE PROPRIETOR. PROPERTY OF ANYTEK TECHNOLOGY CO., LTD

TITLE	NH 3.5mm Series				
PART NO.	NHxx10x0xxxxG			DWG NO.	8NH0001
APPROVED	CHECKED	DESIGNED	DRAWN	CUST NO.	
		Da cheng 2013.08.22	Da cheng 2013.08.22	SHEET: 01/01	UNIT: mm / SCALE: NONE / REV.: C

Tolerance	
X.	±0.50
X.X	±0.30
X.XX	±0.10
X°	±1°