SYM.	DCN NO.	DESCRIPTION	DATE	DRAWN	CHECKED	APP'D	APP'D
2	34604	CHANGED FORM	27.Sep.'94	——	SHINMYO	I.Iimori	

DWG. NO. SJ028347-E

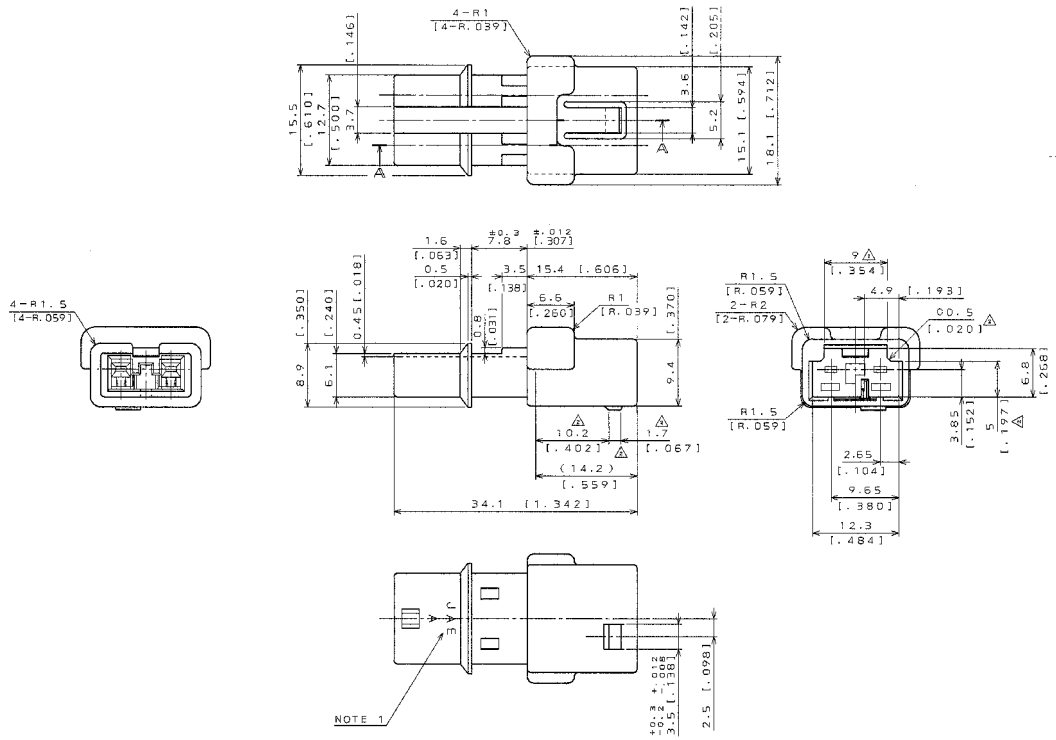

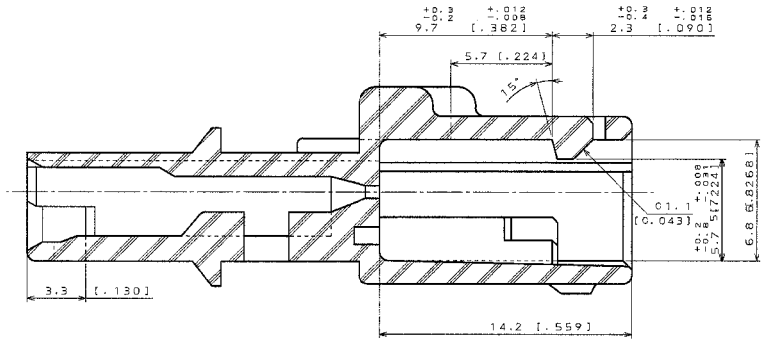

SECTION A-A
(SCALE 5/1)

NOTE 1. COMPANY LOGO "JAE" & TOOLING MARK APPEARS IN RAISED LETTERS.

2. TOLERANCES (DEMENSION:X)

- X≦10 [.394] : ±0.2 [±.008]
- 10<X≦30 [.394] [1.181] : ±0.5 [.020]
- 30<X≦100 [1.181] [3.937] : ±1 [.039]

SPECIAL CONTROL ITEM
MX9

ITEM	DESCRIPTION	Q'TY	MATERIAL	FINISH	REMARKS

REFERENCE DOCUMENT

MATERIAL

TREATMENT

FINISH

DIMENSIONS ARE IN MILLIMETERS
TOLERANCES ON: [INCHES]

DIMENSION	ANGLES
. ±	X° ±
.X ±	X°X'±
.XX ±	CONCENTRICITY WITHIN φ.X.X
.XXX ±	

DATE 23.May.'94
DRAWN M.OOWA
CHECKED SHINMYO
APP'D
APP'D I.IIMORI

SCALE 1/1
TITLE MX9-2PC
SERIES MX9

JAPAN AVIATION ELECTRONICS INDUSTRY, LTD.
MUSASHINO, AKISHIMA-SHI TOKYO, JAPAN

DWG. NO. SJ028347-E

SIZE A2

CDS94-110-10178

JAE-CONNECTOR.COM
Reference Only

DCF-116A

0 10 20 30 40 50 60 70 80 90 100