PRODUCT DESCRIPTION CODE :

10131930-YXXXLF

- RoHS COMPATIBLE, SEE NOTE 3
- PACKAGING : "U" FOR TUBE
- TOTAL NUMBER OF POSITIONS 02 TO 25
- PLATING :

1 = 0.76 µm GOLD ON CONTACT AREA
2.00µm MIN MATTE TIN ON TAIL

2 = 0.38µm GOLD ON CONTACT AREA
2.00µm MIN MATTE TIN ON TAIL

3 = 0.20µm GOLD ON CONTACT AREA
2.00µm MIN MATTE TIN ON TAIL

4 = 0.76 µm GXT ON CONTACT AREA
2.00µm MIN MATTE TIN ON TAIL

5 = 0.38µm GXT ON CONTACT AREA
2.00µm MIN MATTE TIN ON TAIL

6 = 0.20µm GXT ON CONTACT AREA
2.00µm MIN MATTE TIN ON TAIL

9 = 2.54µm MIN MATTE TIN ON CONTACT AREA
2.00µm MIN MATTE TIN ON TAIL

1.27µm NICKEL MIN UNDERLAYER

NOTES :

1 - MATERIAL
HOUSING : HIGH TEMPERATURE GLASS FILLED FLAME RETARDANT PER UL 94 V-0
TERMINAL: COPPER ALOY

2- TO DETERMINE DIMENSIONS :
N = NUMBER OF POSITIONS PER ROW
EXAMPLE : 8 POS N x 2 = 16mm
UP TO N = 12 TOLERANCE : 0 -0.10
FROM N = 13 TOLERANCE : 0.05 -0.10

3 - RoHS COMPATIBLE PRODUCT SPECIFICATIONS
a - PLATING :
"LF" MEANS THE PRODUCT IS LEAD-FREE, 2µm MINIMUM MATTE TIN OVER 1.27µm MINIMUM NICKEL UNDERPLATE
b - MANUFACTURING PROCESS COMPATIBILITY
THE HOUSING WILL WITHSTAND EXPOSURE TO 260°C ±5°C TEMPERATURE FOR 5 SECONDS IN A WAVE SOLDER APPLICATION WITH A 1.6mm MIN THICK CIRCUIT BOARD.
c - LABELLING :
MEETS PACKAGING SPECS AS PER GS-14-920
d - LEGAL STATEMENT : SEE GS-47-0004

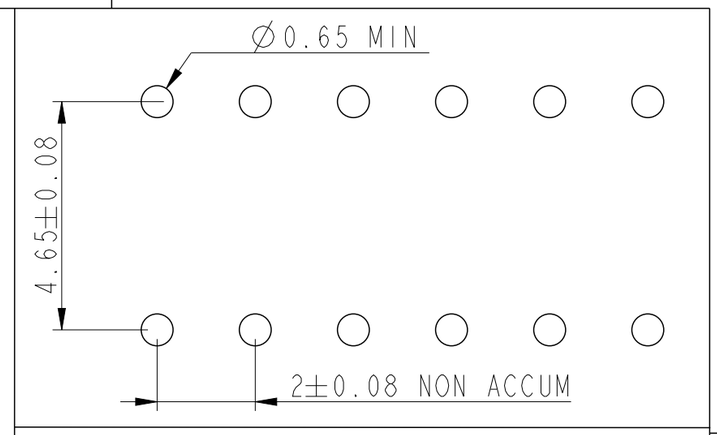

RECOMMENDED HOLE PATTERN

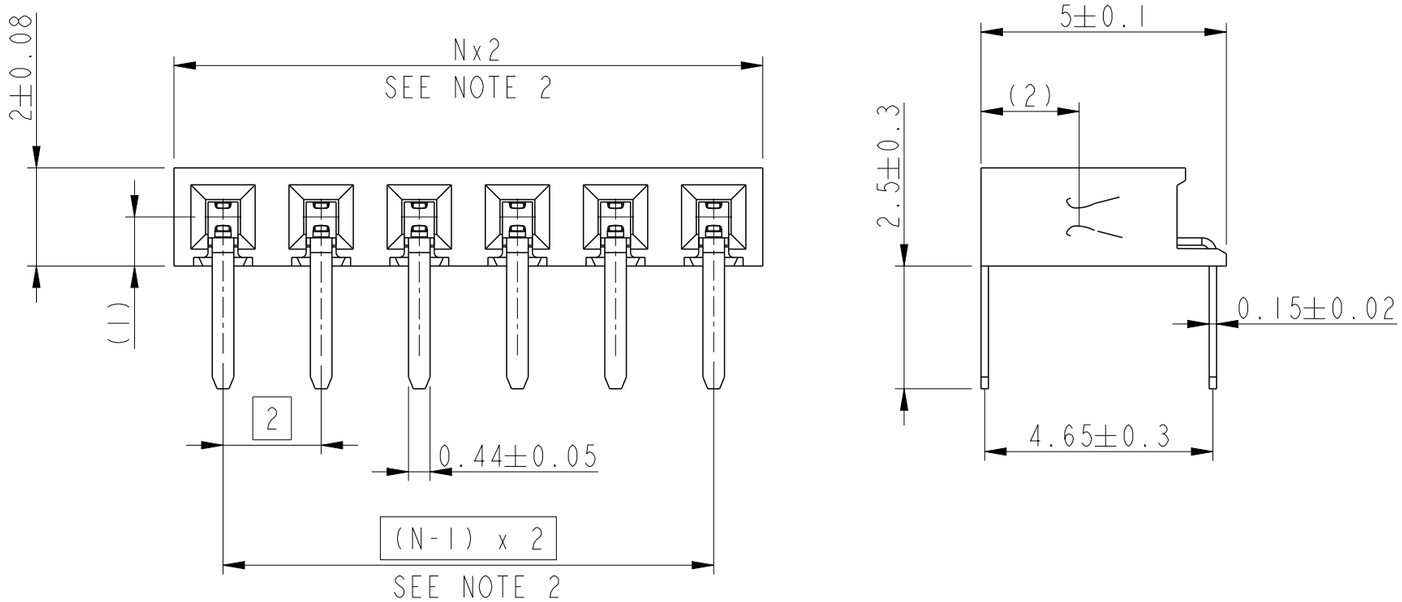

spec ref	GS-12-1326			dr	Cyril Jeune	2014/12/02	projection
tolerance std	TOLERANCES UNLESS OTHERWISE SPECIFIED			eng	Detouillon, Da	2020/12/22	mm
ISO 406 ISO 1101				chr	-	-	
				appr	Wollin, Severi	2020/12/21	product family -
surface	linear	0.X	±	Amphenol FCi	title	MINITEK RECEPTACLE 2MM ASSEMBLY HCC SR TMT	dwg no 10131930
		0.XX	±				
		0.XXX	±				
ISO 1302	angular	0°	±°	www.fci.com	cat. no. -	Product - Customer Drw	sheet 1 of 1

size	scale	rev
A3	8:1	A

ecn no -
rel level **Released**

Creo File:ELX-WC-A3C,REV F,2020-12-21

© 2020 Amphenol Corporation